U.S. Tsubaki Power Transmission, LLC
301 E. Marquardt Dr.
Wheeling, IL 60090

Phone: 847.459.9500 or 800.323.7790
Fax: 847.459.9515
Email: sales@ustsubaki.com

Website: www.ustsubaki.com

ITEM # MZ30-P, MZ30-7/8" BORE CAM CLUTCH

MZ Series Cam Clutch products are designed for general overrunning applications. The MZ Series can be used in applications which require the inner or outer race to have overrunning capability. The MZ Series comes pre-lubricated with grease and is ready to install. No lubrication maintenance is required. This series is ideal for gears, pulleys and clutch assemblies.



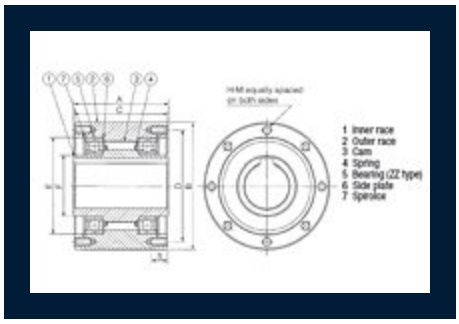

Specifications

Bore Size	0.875 in
Bore Keyway	3/16 x 3/32"
Torque Capacity	542.1 lb·ft 735.0 N·m
Drag Torque	0.288 lb·ft 0.39 N·m
Max. Overrunning Shaft	1800 rpm
Max. Overrunning Outer Race	500 rpm

Max. Indexing	150 cpm
A (Overall Width)	3.228 in 82.00 mm
B (Overall Diameter)	3.937 in 100.00 mm
C (Overall Race Width)	3.150 in 80.00 mm
D (Pitch Circle Diameter)	3.465 in 88.00 mm
E (Outer Race I.D.)	2.953 in 75.00 mm
F (Inner Race O.D.)	1.772 in 45.00 mm
G (Counter Bore Depth)	0.350 in 8.90 mm
S (Thread Depth)	0.630 in 16.00 mm
H (Quantity)	6
M (Size x Pitch)	M8x1.25
Weight	8.140 lb 3.700 kg