U.S. Tsubaki Power Transmission, LLC
301 E. Marquardt Dr.
Wheeling, IL 60090

Phone: 847.459.9500 or 800.323.7790
Fax: 847.459.9515

Email: sales@ustsubaki.com
Website: www.ustsubaki.com

ITEM # TSS40, TSS-40 MM BORE CAM CLUTCH

TSS Series Cam Clutch is designed for press fit installation with outside dimensions the same as the 62 Series ball bearing. As a sprag clutch, higher torque capacities are often higher than a similar ramp & roller design. This design provides easy handling and installation, most often with a Series 62 ball bearing located next to the TSS Cam Clutch. The TSS Series is ideal for applications that require high speed inner race overrunning in a very compact package. This series ships pre-

more

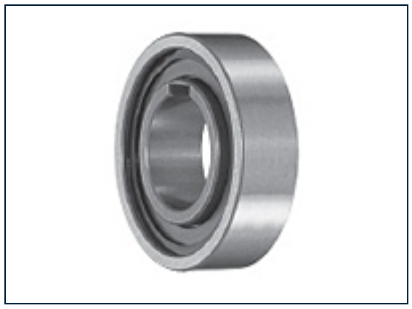

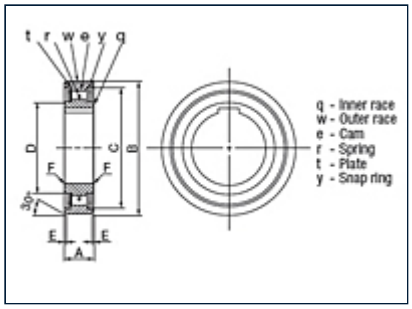

Specifications

Bore Size	1.575 in 40.00 mm
Torque Capacity	218.3 lb·ft 296.0 N·m
Max. Overrunning Inner Race	1400 rpm

Max. Overrunning Outer Race	700 rpm
Drag Torque	0.133 lb·ft 0.18 N·m
Keyway	12 x 2.2 mm
A (Overall Width)	0.709 in 18.00 mm
B (Overall Diameter)	3.150 in 80.00 mm
C (Outer Race I.D.)	2.835 in 72.00 mm
D (Inner Race I.D.)	1.969 in 50.00 mm
E (Offset)	0.031 in 0.80 mm
F (Chamfer)	0.039 in 1.00 mm
Weight	0.935 lb 0.425 kg