U.S. Tsubaki Power Transmission, LLC
301 E. Marquardt Dr.
Wheeling, IL 60090

Phone: 847.459.9500 or 800.323.7790
Fax: 847.459.9515
Email: sales@ustsubaki.com

Website: www.ustsubaki.com

ITEM # MZEU20, MZEU-20 MM BORE CAM CLUTCH

MZEU Series is a general purpose Cam Clutch suitable for a wide variety of applications. A selection of add-on flanges and torque arms are available enabling this Cam Clutch to easily fit where custom designed products were previously required. MZEU12 to MZEU80 are pre-greased, requiring no lubrication. MZEU90 to MZEU150 require oil lubrication. Contact Tsubaki for indexing applications above 50 cycles per minute.



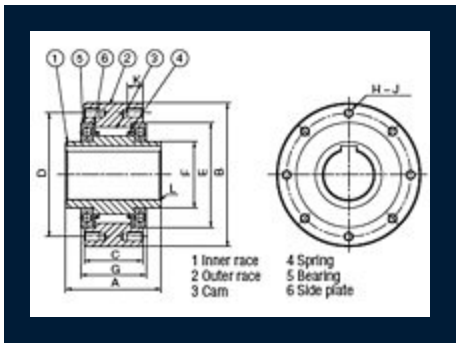

Specifications

Bore Size	0.787 in 20.00 mm
Torque Capacity	180.7 lb·ft 245.0 N·m
Max. Overrunning Shaft	1600 rpm
Max. Overrunning Outer Race	700 rpm
Drag Torque	0.214 lb·ft 0.29 N·m

Inner Race Keyway	6 x 2.8 mm
A (Overall Width)	2.244 in 57.00 mm
B (Overall Height)	2.953 in 75.00 mm
C (Outer Race Width)	1.339 in 34.00 mm
D (Bolt Circle Diameter)	2.520 in 64.00 mm
E (Outer Race I.D.)	2.165 in 55.00 mm
F (Inner Race O.D.)	1.181 in 30.00 mm
G (Cam Cage Width)	1.535 in 39.00 mm
J (Quantity)	4
H (Bolt Circle Tap)	M5
K (Thread Depth)	0.315 in 8.00 mm
L (Chamfer)	0.031 in 0.80 mm
Weight	2.640 lb 1.200 kg