U.S. Tsubaki Power Transmission, LLC
301 E. Marquardt Dr.
Wheeling, IL 60090

Phone: 847.459.9500 or 800.323.7790
Fax: 847.459.9515
Email: sales@ustsubaki.com

Website: www.ustsubaki.com

ITEM # MZ60-60, MZ60-60 MM BORE CAM CLUTCH

MZ Series Cam Clutch products are designed for general overrunning applications. The MZ Series can be used in applications which require the inner or outer race to have overrunning capability. The MZ Series comes pre-lubricated with grease and is ready to install. No lubrication maintenance is required. This series is ideal for gears, pulleys and clutch assemblies.



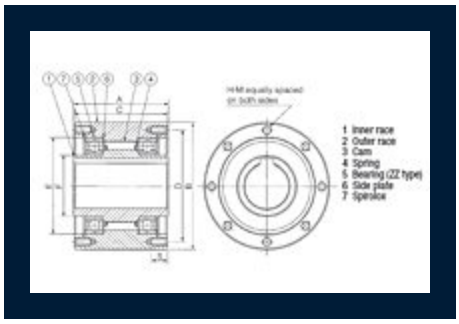

Specifications

Bore Size	60.00 mm
Bore Keyway	18 x 4.4 mm
Torque Capacity	1556.3 lb·ft 2110.0 N·m
Drag Torque	0.723 lb·ft 0.98 N·m
Max. Overrunning Shaft	1600 rpm
Max. Overrunning Outer Race	250 rpm

Max. Indexing	150 cpm
A (Overall Width)	4.016 in 102.00 mm
B (Overall Diameter)	6.102 in 155.00 mm
C (Overall Race Width)	3.937 in 100.00 mm
D (Pitch Circle Diameter)	5.512 in 140.00 mm
E (Outer Race I.D.)	4.921 in 125.00 mm
F (Inner Race O.D.)	3.150 in 80.00 mm
G (Counter Bore Depth)	0.358 in 9.10 mm
S (Thread Depth)	0.630 in 16.00 mm
H (Quantity)	8
M (Size x Pitch)	M8x1.25
Weight	22.440 lb 10.200 kg