U.S. Tsubaki Power Transmission, LLC
301 E. Marquardt Dr.
Wheeling, IL 60090

Phone: 847.459.9500 or 800.323.7790
Fax: 847.459.9515
Email: sales@ustsubaki.com

Website: www.ustsubaki.com

ITEM # MZ20-L, MZ20-3/4" BORE CAM CLUTCH

MZ Series Cam Clutch products are designed for general overrunning applications. The MZ Series can be used in applications which require the inner or outer race to have overrunning capability. The MZ Series comes pre-lubricated with grease and is ready to install. No lubrication maintenance is required. This series is ideal for gears, pulleys and clutch assemblies.



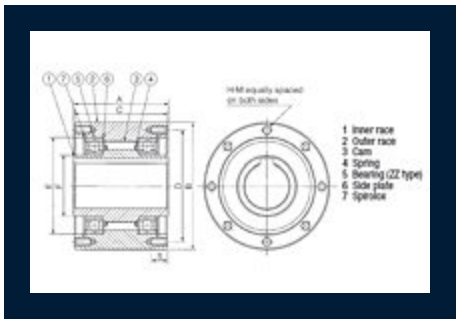

Specifications

Bore Size	0.750 in
Bore Keyway	3/16 x 3/32"
Torque Capacity	238.2 lb·ft 323.0 N·m
Drag Torque	0.214 lb·ft 0.29 N·m
Max. Overrunning Shaft	1900 rpm
Max. Overrunning Outer Race	700 rpm

Max. Indexing	150 cpm
A (Overall Width)	2.638 in 67.00 mm
B (Overall Diameter)	3.150 in 80.00 mm
C (Overall Race Width)	2.559 in 65.00 mm
D (Pitch Circle Diameter)	2.677 in 68.00 mm
E (Outer Race I.D.)	2.165 in 55.00 mm
F (Inner Race O.D.)	1.181 in 30.00 mm
G (Counter Bore Depth)	0.299 in 7.60 mm
S (Thread Depth)	0.472 in 12.00 mm
H (Quantity)	6
M (Size x Pitch)	M6x1
Weight	4.400 lb 2.000 kg