U.S. Tsubaki Power Transmission, LLC
301 E. Marquardt Dr.
Wheeling, IL 60090

Phone: 847.459.9500 or 800.323.7790
Fax: 847.459.9515
Email: sales@ustsubaki.com

Website: www.ustsubaki.com

ITEM # BSEU70-65, BSEU70-65 MM BORE CAM CLUTCH

BSEU Series Cam Clutch was developed as a user-friendly backstopping Cam Clutch. It has cam and roller construction which is the same as the smaller size BS Series Cam Clutch. The outer race has a special shape which combines the torque arm providing easy installation. These Cam Clutches are shipped pre-lubricated with grease and ready for installation. Most often used as a backstop in applications where limited space is available.



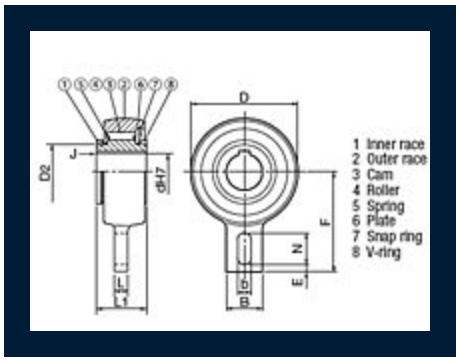

Specifications

Torque Capacity	2316.0 lb·ft 3140.0 N·m
Max. Overrunning Speed	350 rpm
Bore Size	2.559 in 65.00 mm
Inner Race Keyway	18 x 4.4 mm
D (Diameter)	6.496 in 165.00 mm
D2	3.543 in 90.00 mm

L1 (Overall Width)	2.323 in 59.00 mm
L (Width)	0.787 in 20.00 mm
B (Tab Width)	3.150 in 80.00 mm
F (End to Center-Line)	5.512 in 140.00 mm
b (Slot Width)	0.709 in 18.00 mm
N (Slot Height)	1.378 in 35.00 mm
E	0.394 in 10.00 mm
J (Chamfer)	0.079 in 2.00 mm
Weight (Approx.)	16.720 lb 7.600 kg