U.S. Tsubaki Power Transmission, LLC
301 E. Marquardt Dr.
Wheeling, IL 60090

Phone: 847.459.9500 or 800.323.7790
Fax: 847.459.9515

Email: sales@ustsubaki.com
Website: www.ustsubaki.com

ITEM # BB20, BB-20 MM BORE CAM CLUTCH

BB Series Cam Clutches are a combination of a 62 Series ball bearing and a cam style clutch. These units are designed for press fit applications and are available in five variations, combinations of metal shield or dust protective sealed type and with or without keyways on the inner and/or outer race to allow design and application flexibility. BB Series units come grease lubricated but metal shielded style can be adapted for oil bath lubrication.

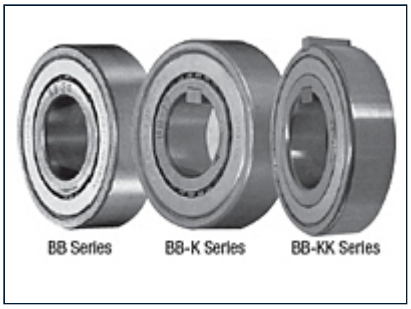

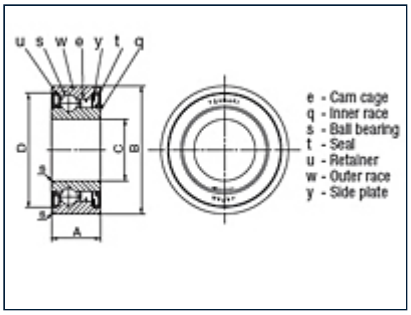

Specifications	
Torque Capacity	45 lb·ft 61 N·m
Max. Overrunning Inner Race	3000 rpm
Max. Overrunning Outer Race	1600 rpm
Drag Torque	0.010 lb·ft 0.01 N·m

Construction	Metal shield on one side, retainer on other side.
A (Overall Width)	0.551 in 14.00 mm
B (Overall Diameter)	1.850 in 47.00 mm
C (Bore Size)	0.787 in 20.00 mm
D (Outer Race I.D.)	1.642 in 41.70 mm
S (Chamfer)	0.039 in 1.00 mm
Dynamic Bearing Loads	1911 lbf 8500 N
Static Bearing Loads	1102 lbf 4900 N
Weight	0.300 lb 0.120 kg