U.S. Tsubaki Power Transmission, LLC
301 E. Marquardt Dr.
Wheeling, IL 60090

Phone: 847.459.9500 or 800.323.7790
Fax: 847.459.9515
Email: sales@ustsubaki.com

Website: www.ustsubaki.com

ITEM # MIUS700-2, MIUS700-2" BORE CAM CLUTCH

MIUS Series Cam Clutch units are designed for indexing applications. In this mode of operation, reciprocating motion applied to the driving race of the clutch is transformed into uni-directional intermittent motion, at the driven race. The clutch drives in the forward stroke (index) and overruns on the return stroke. In addition to torque capacity, consider the number of indexing cycles per minute. This series ships pre-lubricated with oil.



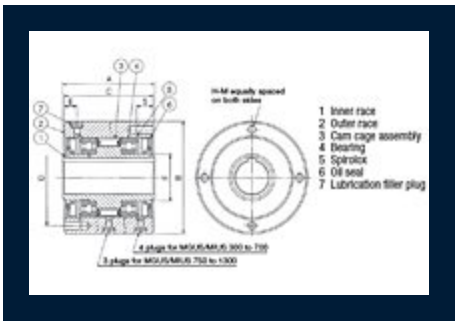

Specifications

Bore Size	2.000 in 50.80 mm
Bore Keyseat	1/2 x 1/4"
Torque Capacity	4336.9 lb·ft 5880.0 N·m
Max. Overrunning Inner Race	30 rpm
Max. Indexing	300 cpm

Drag Torque	1.940 lb·ft 2.63 N·m
A (Overall Width)	5.000 in 127.00 mm
B (Overall Diameter)	7.125/7.123 in 180.98/180.93 mm
C (Outer Race Width)	4.880 in 123.95 mm
D (Pitch Circle Diameter)	6.250 in 158.75 mm
E (Filler Plug Location)	0.780 in 19.80 mm
F (Inner Race O.D.)	3.996 in 101.50 mm
S (Thread Depth)	0.787 in 20.00 mm
H (No. of Tapped Holes)	6
M (Thread)	3/8-24
Oil Filler Plug	M6 x P1.0
Oil Capacity	8.84 oz 260 mL
Weight	42.989 lb 19.500 kg