**U.S. Tsubaki Power Transmission, LLC**
301 E. Marquardt Dr.
Wheeling, IL 60090

**Phone:** 847.459.9500 or 800.323.7790
**Fax:** 847.459.9515

**Email:** sales@ustsubaki.com
**Website:** www.ustsubaki.com



# ITEM # BUS209, BUS200-209 MM BORE CAM CLUTCH

BUS200 Series Cam Clutch is a general purpose Cam Clutch used in backstop, overrunning, and indexing applications. Generally the customer supplies the inner race as a component of his machinery but if desired, Tsubaki can also provide an inner race. A second very convenient feature is that the BUS200 Series outside diameter matches with 6200 Series ball bearings. Because of the common popular dimensions, BUS200 Series Cam Clutches are found as integral components in many pieces of machinery;

more

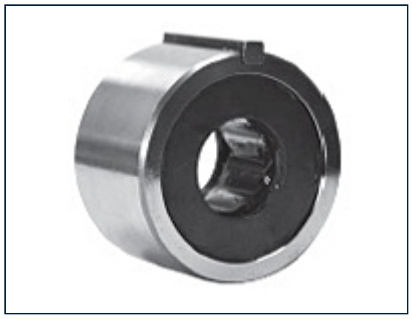

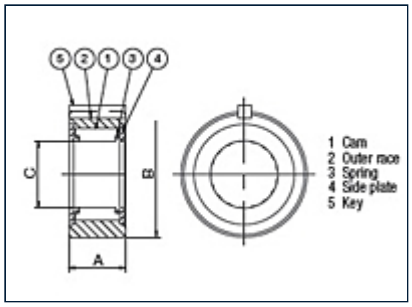


| Specifications | |
|---|---|
| Torque Capacity | 405.0 lb·ft<br>549.0 N·m |
| Max. Overrunning Shaft | 1800 rpm |
| Max. Overrunning Outer Race | 200 rpm |

| | |
|---|---|
| Drag Torque | 0.150 lb·ft<br>0.20 N·m |
| Max. Indexing | 150 cpm |
| A (Overall Width) | 1.250 in<br>31.75 mm |
| B (Overall Diameter) | 3.3457/3.3450 in<br>84.98/84.97 mm |
| C (Shaft Diameter) | 1.841/1.840 in<br>46.76/46.74 mm |
| Keyway | 3/8 x 3/8 x 1-1/4 in |
| Use with Bearing Number | 6209 |
| Weight | 2.100 lb<br>0.950 kg |