U.S. Tsubaki Power Transmission, LLC
301 E. Marquardt Dr.
Wheeling, IL 60090

Phone: 847.459.9500 or 800.323.7790
Fax: 847.459.9515
Email: sales@ustsubaki.com

Website: www.ustsubaki.com

ITEM # MZEU150, MZEU-150 MM BORE CAM CLUTCH

MZEU Series is a general purpose Cam Clutch suitable for a wide variety of applications. A selection of add-on flanges and torque arms are available enabling this Cam Clutch to easily fit where custom designed products were previously required. MZEU12 to MZEU80 are pre-greased, requiring no lubrication. MZEU90 to MZEU150 require oil lubrication. Contact Tsubaki for indexing applications above 50 cycles per minute.



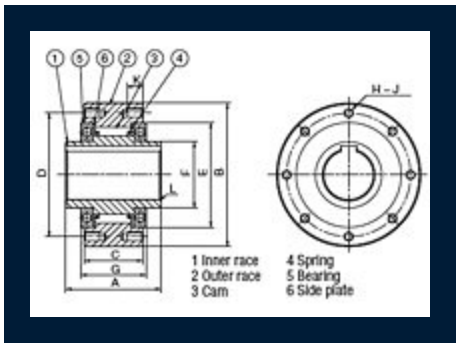

Specifications

Bore Size	5.906 in 150.00 mm
Torque Capacity	24929.5 lb·ft 33800.0 N·m
Max. Overrunning Shaft	240 rpm
Max. Overrunning Outer Race	80 rpm
Drag Torque	5.996 lb·ft 8.13 N·m

Inner Race Keyway	36 x 8.4 mm
A (Overall Width)	9.685 in 246.00 mm
B (Overall Height)	15.748 in 400.00 mm
C (Outer Race Width)	7.087 in 180.00 mm
D (Bolt Circle Diameter)	14.173 in 360.00 mm
E (Outer Race I.D.)	12.205 in 310.00 mm
F (Inner Race O.D.)	7.874 in 200.00 mm
G (Cam Cage Width)	7.638 in 194.00 mm
J (Quantity)	12
H (Bolt Circle Tap)	M20
K (Thread Depth)	1.260 in 32.00 mm
L (Chamfer)	0.098 in 2.50 mm
Weight	321.860 lb 146.300 kg