U.S. Tsubaki Power Transmission, LLC
301 E. Marquardt Dr.
Wheeling, IL 60090

Phone: 847.459.9500 or 800.323.7790
Fax: 847.459.9515

Email: sales@ustsubaki.com
Website: www.ustsubaki.com

ITEM # **BB17GDK**, BB-2GD-17 MM BORE CAM CLUTCH

BB-2GD Series Cam Clutches build upon the standard BB Series with the addition of complete rubber seals on both sides. The addition of rubber seals makes the BB-GD Series slightly wider (0.197", 5 mm) than the equivalent 62 Series ball bearing.

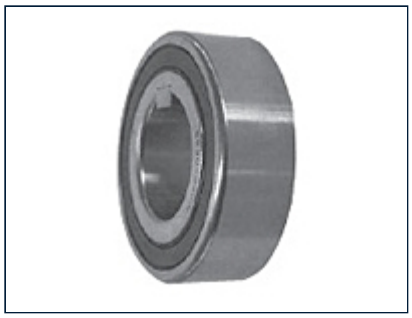

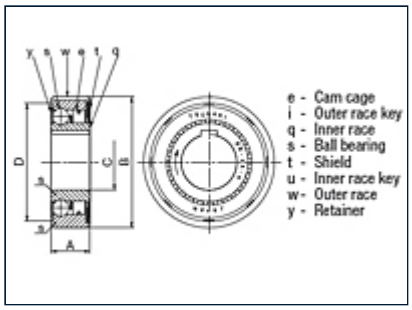

Specifications

Torque Capacity	32.0 lb·ft 43.0 N·m
Max. Overrunning Inner Race	3500 rpm
Max. Overrunning Outer Race	1900 rpm
Drag Torque	0.037 lb·ft 0.05 N·m
A (Overall Width)	0.669 in

	17.00 mm
B (Overall Diameter)	1.575 in 40.00 mm
C (Bore Size)	0.669 in 17.00 mm
D (Outer Race I.D.)	1.435 in 36.45 mm
S (Chamfer)	0.024 in 0.60 mm
Dynamic Bearing Loads	1574 lbf 7000 N
Static Bearing Loads	832 lbf 3700 N
Construction	Rubber seals on both sides
Weight	0.200 lb 0.100 kg