U.S. Tsubaki Power Transmission, LLC
301 E. Marquardt Dr.
Wheeling, IL 60090

Phone: 847.459.9500 or 800.323.7790
Fax: 847.459.9515
Email: sales@ustsubaki.com

Website: www.ustsubaki.com

ITEM # BR70HT-B100A-60, BR-HT70-60.00 MM BORE CAM CLUTCH

BR-HT is mainly used in backstop applications as an integral part of a gear reducer. Prevention of reverse rotation for inclined conveyor and bucket elevator are typical application BR-HT assures not only the immediate backstop function under high torque, but also long service life by the “lift-off” design. In addition, installation on the high speed shaft with low torque enables selection of more compact models with resulting lower cost.



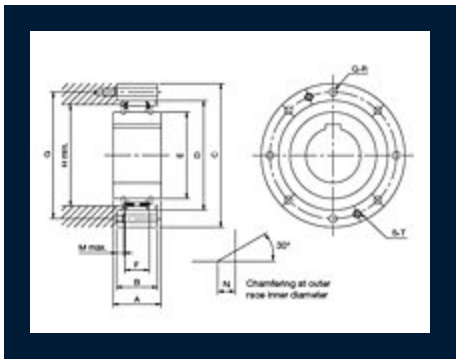

Specifications

Torque	2323.3 lb·ft 3150.0 N·m
Min. Inner Race Overrunning Speed	390 rpm
Max. Inner Race Overrunning Speed	3600 rpm
Max. Engagement	220 rpm
Bore Size	2.362 in 60.00 mm

A (Inner Race Width)	2.362 in 60.00 mm
B (Outer Race Width)	1.969 in 50.00 mm
C (Outer Race O.D.)	7.480 in 190.00 mm
D (Outer Race I.D.)	5.512 in 140.00 mm
E (Inner Race O.D.)	4.213 in 107.00 mm
G (Bolt Circle Diameter)	6.496 in 165.00 mm
Q-R (Mounting Holes Quantity - Size)	12-M10
S-T (Removed Holes Quantity - Size)	2-M10
F (Cam Width)	1.417 in 36.00 mm
Weight	20.240 lb 9.200 kg
H (Housing Bore Min.)	4.921 in 125.00 mm
M (Counter Bore Depth Max.)	0.236 in 6.00 mm
N (Chamfer)	0.059 in 1.50 mm