U.S. Tsubaki Power Transmission, LLC
301 E. Marquardt Dr.
Wheeling, IL 60090

Phone: 847.459.9500 or 800.323.7790
Fax: 847.459.9515
Email: sales@ustsubaki.com

Website: www.ustsubaki.com

ITEM # BSEU90-85, BSEU90-85 MM BORE CAM CLUTCH

BSEU Series Cam Clutch was developed as a user-friendly backstopping Cam Clutch. It has cam and roller construction which is the same as the smaller size BS Series Cam Clutch. The outer race has a special shape which combines the torque arm providing easy installation. These Cam Clutches are shipped pre-lubricated with grease and ready for installation. Most often used as a backstop in applications where limited space is available.



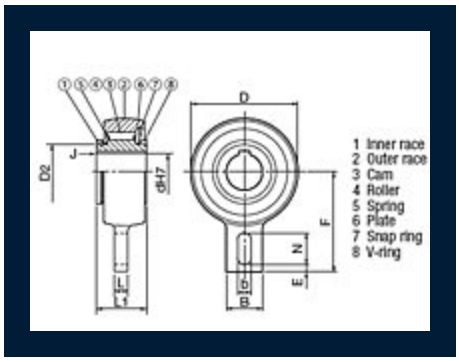

Specifications

Torque Capacity	3467.0 lb·ft 4700.0 N·m
Max. Overrunning Speed	250 rpm
Bore Size	3.346 in 85.00 mm
Inner Race Keyway	22 x 5.4 mm
D (Diameter)	7.480 in 190.00 mm
D2	4.724 in 120.00 mm

L1 (Overall Width)	2.480 in 63.00 mm
L (Width)	0.787 in 20.00 mm
B (Tab Width)	3.150 in 80.00 mm
F (End to Center-Line)	6.496 in 165.00 mm
b (Slot Width)	0.787 in 20.00 mm
N (Slot Height)	1.575 in 40.00 mm
E	0.591 in 15.00 mm
J (Chamfer)	0.079 in 2.00 mm
Weight (Approx.)	22.000 lb 10.000 kg