U.S. Tsubaki Power Transmission, LLC
301 E. Marquardt Dr.
Wheeling, IL 60090

Phone: 847.459.9500 or 800.323.7790
Fax: 847.459.9515
Email: sales@ustsubaki.com

Website: www.ustsubaki.com

ITEM # MGUS800-4D, MGUS800-4 1/4" BORE CAM CLUTCH

MGUS Series Cam Clutch products are designed to satisfy inner or outer race overrunning/general application requirements. Depending on application requirements, the MGUS Series can be used in overrunning, indexing, or backstopping applications. This series is offered in both metric and inch based inner race configurations. MGUS Series units can easily be mated to pulleys, gears, or sprockets. MGUS Series ships pre-lubricated with oil.

Note: When placing an order for MGUS Series Cam Clutch model

more



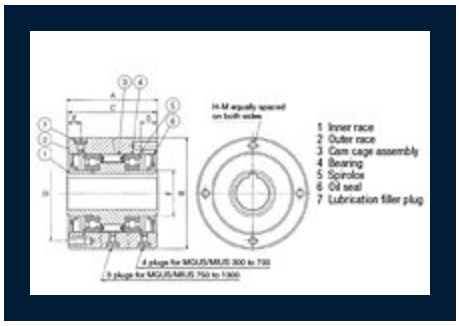

Specifications

Bore Size	4.250 in 107.95 mm
Torque Capacity	12981.1 lb·ft 17600.0 N·m
Max. Overrunning Inner Race	1300 rpm
Max. Overrunning Outer Race	475 rpm

Drag Torque	3.975 lb·ft 5.39 N·m
Bore Keyseat	1 x 3/8"
A (Overall Width)	6.000 in 152.40 mm
B (Overall Diameter)	10.000/9.998 in 254.00/253.95 mm
C (Inner Race Length)	5.880 in 149.35 mm
D (Pitch Circle Diameter)	8.940 in 227.08 mm
E (Cam Clutch Length)	2.940 in 74.68 mm
F (Reservoir Length)	5.512 in 140.00 mm
S	0.984 in 25.00 mm
H No. of Tapped Holes	8
M Thread	1/2-20
Oil Filler Plug	M8 x P1.25
Oil Capacity	17.00 oz 500 mL
Weight	46.500 kg 102.513 lb