U.S. Tsubaki Power Transmission, LLC
301 E. Marquardt Dr.
Wheeling, IL 60090

Phone: 847.459.9500 or 800.323.7790
Fax: 847.459.9515

Email: sales@ustsubaki.com
Website: www.ustsubaki.com

ITEM # TSS30, TSS-30 MM BORE CAM CLUTCH

TSS Series Cam Clutch is designed for press fit installation with outside dimensions the same as the 62 Series ball bearing. As a sprag clutch, higher torque capacities are often higher than a similar ramp & roller design. This design provides easy handling and installation, most often with a Series 62 ball bearing located next to the TSS Cam Clutch. The TSS Series is ideal for applications that require high speed inner race overrunning in a very compact package. This series ships pre-

more

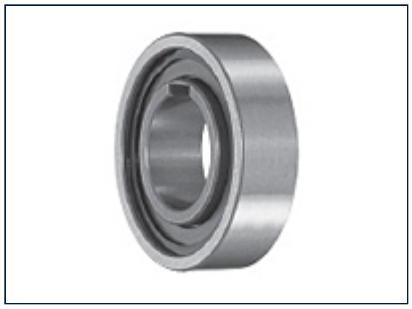

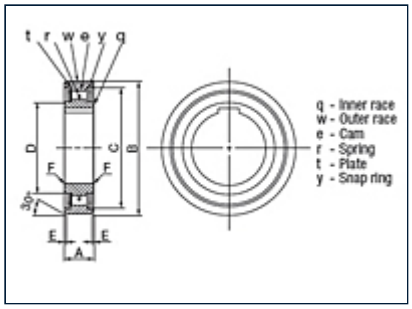

Specifications	
Bore Size	1.181 in 30.00 mm
Torque Capacity	77.4 lb·ft 105.0 N·m
Max. Overrunning Inner Race	1800 rpm

Max. Overrunning Outer Race	900 rpm
Drag Torque	0.022 lb·ft 0.03 N·m
Keyway	8 x 2.0 mm
A (Overall Width)	0.630 in 16.00 mm
B (Overall Diameter)	2.441 in 62.00 mm
C (Outer Race I.D.)	2.165 in 55.00 mm
D (Inner Race I.D.)	1.575 in 40.00 mm
E (Offset)	0.031 in 0.80 mm
F (Chamfer)	0.039 in 1.00 mm
Weight	0.473 lb 0.215 kg