U.S. Tsubaki Power Transmission, LLC
301 E. Marquardt Dr.
Wheeling, IL 60090

Phone: 847.459.9500 or 800.323.7790
Fax: 847.459.9515
Email: sales@ustsubaki.com

Website: www.ustsubaki.com

ITEM # MZ15-15, MZ15-15 MM BORE CAM CLUTCH

MZ Series Cam Clutch products are designed for general overrunning applications. The MZ Series can be used in applications which require the inner or outer race to have overrunning capability. The MZ Series comes pre-lubricated with grease and is ready to install. No lubrication maintenance is required. This series is ideal for gears, pulleys and clutch assemblies.



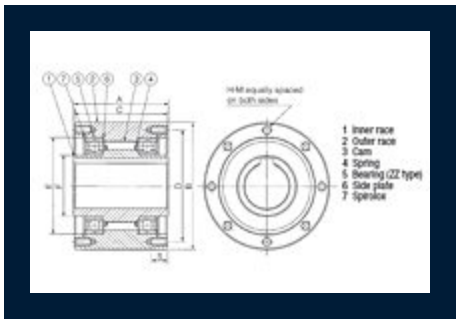

Specifications

Bore Size	15.00 mm
Bore Keyway	5 x 2.3 mm
Torque Capacity	137.2 lb·ft 186.0 N·m
Drag Torque	0.148 lb·ft 0.20 N·m
Max. Overrunning Shaft	2200 rpm
Max. Overrunning Outer Race	900 rpm

Max. Indexing	150 cpm
A (Overall Width)	2.441 in 62.00 mm
B (Overall Diameter)	2.677 in 68.00 mm
C (Overall Race Width)	2.362 in 60.00 mm
D (Pitch Circle Diameter)	2.283 in 58.00 mm
E (Outer Race I.D.)	1.850 in 47.00 mm
F (Inner Race O.D.)	0.984 in 25.00 mm
G (Counter Bore Depth)	0.217 in 5.50 mm
S (Thread Depth)	0.394 in 10.00 mm
H (Quantity)	6
M (Size x Pitch)	M5x0.8
Weight	3.080 lb 1.400 kg