U.S. Tsubaki Power Transmission, LLC
301 E. Marquardt Dr.
Wheeling, IL 60090

Phone: 847.459.9500 or 800.323.7790
Fax: 847.459.9515
Email: sales@ustsubaki.com

Website: www.ustsubaki.com

ITEM # MZ45-1H, MZ45-1 1/2" BORE CAM CLUTCH

MZ Series Cam Clutch products are designed for general overrunning applications. The MZ Series can be used in applications which require the inner or outer race to have overrunning capability. The MZ Series comes pre-lubricated with grease and is ready to install. No lubrication maintenance is required. This series is ideal for gears, pulleys and clutch assemblies.



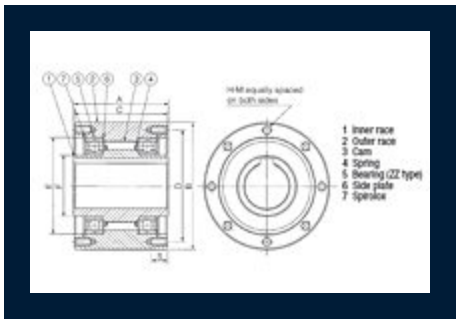

Specifications

Bore Size	1.500 in
Bore Keyway	3/8 x 3/16"
Torque Capacity	1194.8 lb·ft 1620.0 N·m
Drag Torque	0.509 lb·ft 0.69 N·m
Max. Overrunning Shaft	1700 rpm
Max. Overrunning Outer Race	300 rpm

Max. Indexing	150 cpm
A (Overall Width)	3.622 in 92.00 mm
B (Overall Diameter)	4.921 in 125.00 mm
C (Overall Race Width)	3.543 in 90.00 mm
D (Pitch Circle Diameter)	4.331 in 110.00 mm
E (Outer Race I.D.)	3.740 in 95.00 mm
F (Inner Race O.D.)	2.362 in 60.00 mm
G (Counter Bore Depth)	0.331 in 8.40 mm
S (Thread Depth)	0.630 in 16.00 mm
H (Quantity)	8
M (Size x Pitch)	M8x1.25
Weight	13.640 lb 6.200 kg