U.S. Tsubaki Power Transmission, LLC
301 E. Marquardt Dr.
Wheeling, IL 60090

Phone: 847.459.9500 or 800.323.7790
Fax: 847.459.9515
Email: sales@ustsubaki.com

Website: www.ustsubaki.com

ITEM # MIUS400-J, MIUS400-5/8" BORE CAM CLUTCH

MIUS Series Cam Clutch units are designed for indexing applications. In this mode of operation, reciprocating motion applied to the driving race of the clutch is transformed into uni-directional intermittent motion, at the driven race. The clutch drives in the forward stroke (index) and overruns on the return stroke. In addition to torque capacity, consider the number of indexing cycles per minute. This series ships pre-lubricated with oil.



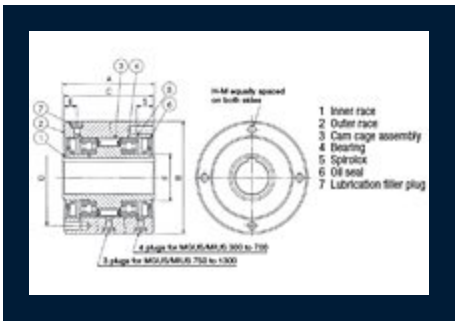

Specifications

Bore Size	0.625 in 15.88 mm
Bore Keyseat	3/16 x 3/32"
Torque Capacity	397.5 lb·ft 539.0 N·m
Max. Overrunning Inner Race	50 rpm
Max. Indexing	300 cpm

Drag Torque	0.280 lb·ft 0.38 N·m
A (Overall Width)	2.750 in 69.85 mm
B (Overall Diameter)	3.500/3.498 in 88.90/88.85 mm
C (Outer Race Width)	2.690 in 68.33 mm
D (Pitch Circle Diameter)	2.875 in 73.03 mm
E (Filler Plug Location)	0.421 in 10.70 mm
F (Inner Race O.D.)	1.248 in 31.70 mm
S (Thread Depth)	0.630 in 16.00 mm
H (No. of Tapped Holes)	4
M (Thread)	5/16-24
Oil Filler Plug	M6 x P1.0
Oil Capacity	2.04 oz 60 mL
Weight	5.952 lb 2.700 kg