**U.S. Tsubaki Power Transmission, LLC**
301 E. Marquardt Dr.
Wheeling, IL 60090

**Phone:** 847.459.9500 or 800.323.7790
**Fax:** 847.459.9515
**Email:** sales@ustsubaki.com

**Website:** www.ustsubaki.com

# ITEM # MZ30-25, MZ30-25 MM BORE CAM CLUTCH

MZ Series Cam Clutch products are designed for general overrunning applications. The MZ Series can be used in applications which require the inner or outer race to have overrunning capability. The MZ Series comes pre-lubricated with grease and is ready to install. No lubrication maintenance is required. This series is ideal for gears, pulleys and clutch assemblies.




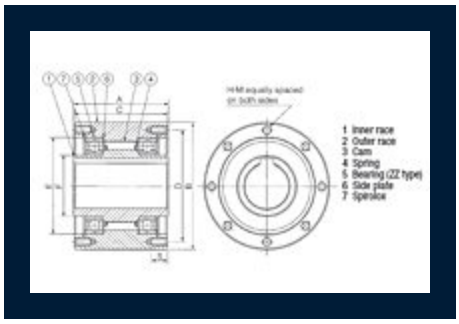


## Specifications

| | |
|---|---|
| **Bore Size** | 25.00 mm |
| **Bore Keyway** | 8 x 3.3 mm |
| **Torque Capacity** | 542.1 lb·ft<br>735.0 N·m |
| **Drag Torque** | 0.288 lb·ft<br>0.39 N·m |
| **Max. Overrunning Shaft** | 1800 rpm |
| **Max. Overrunning Outer Race** | 500 rpm |

| | |
|---|---|
| **Max. Indexing** | 150 cpm |
| **A (Overall Width)** | 3.228 in<br>82.00 mm |
| **B (Overall Diameter)** | 3.937 in<br>100.00 mm |
| **C (Overall Race Width)** | 3.150 in<br>80.00 mm |
| **D (Pitch Circle Diameter)** | 3.465 in<br>88.00 mm |
| **E (Outer Race I.D.)** | 2.953 in<br>75.00 mm |
| **F (Inner Race O.D.)** | 1.772 in<br>45.00 mm |
| **G (Counter Bore Depth)** | 0.350 in<br>8.90 mm |
| **S (Thread Depth)** | 0.630 in<br>16.00 mm |
| **H (Quantity)** | 6 |
| **M (Size x Pitch)** | M8x1.25 |
| **Weight** | 8.140 lb<br>3.700 kg |