U.S. Tsubaki Power Transmission, LLC
301 E. Marquardt Dr.
Wheeling, IL 60090

Phone: 847.459.9500 or 800.323.7790
Fax: 847.459.9515
Email: sales@ustsubaki.com

Website: www.ustsubaki.com

ITEM # MIUS900-4L, MIUS900-4 3/4" BORE CAM CLUTCH

MIUS Series Cam Clutch units are designed for indexing applications. In this mode of operation, reciprocating motion applied to the driving race of the clutch is transformed into uni-directional intermittent motion, at the driven race. The clutch drives in the forward stroke (index) and overruns on the return stroke. In addition to torque capacity, consider the number of indexing cycles per minute. This series ships pre-lubricated with oil.



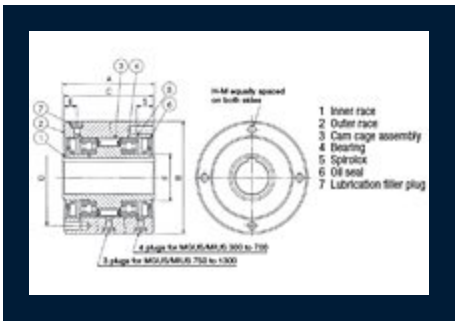

Specifications

Bore Size	4.750 in 125.41 mm
Bore Keyseat	1 x 1/2"
Torque Capacity	18070.2 lb·ft 24500.0 N·m
Max. Overrunning Inner Race	20 rpm
Max. Indexing	300 cpm

Drag Torque	6.940 lb·ft 9.41 N·m
A (Overall Width)	6.380 in 162.05 mm
B (Overall Diameter)	12.000/11.997 in 304.80/304.72 mm
C (Outer Race Width)	6.250 in 158.75 mm
D (Pitch Circle Diameter)	9.750 in 247.65 mm
E (Filler Plug Location)	3.125 in 79.38 mm
F (Inner Race O.D.)	6.693 in 170.00 mm
S (Thread Depth)	1.260 in 32.00 mm
H (No. of Tapped Holes)	10
M (Thread)	5/8-18
Oil Filler Plug	M8 x P1.25
Oil Capacity	42.16 oz 1240 mL
Weight	155.423 lb 70.500 kg