U.S. Tsubaki Power Transmission, LLC
301 E. Marquardt Dr.
Wheeling, IL 60090

Phone: 847.459.9500 or 800.323.7790
Fax: 847.459.9515
Email: sales@ustsubaki.com

Website: www.ustsubaki.com

ITEM # MGUS400-H, MGUS400-1/2" BORE CAM CLUTCH

MGUS Series Cam Clutch products are designed to satisfy inner or outer race overrunning/general application requirements. Depending on application requirements, the MGUS Series can be used in overrunning, indexing, or backstopping applications. This series is offered in both metric and inch based inner race configurations. MGUS Series units can easily be mated to pulleys, gears, or sprockets. MGUS Series ships pre-lubricated with oil.

Note: When placing an order for MGUS Series Cam Clutch model

more



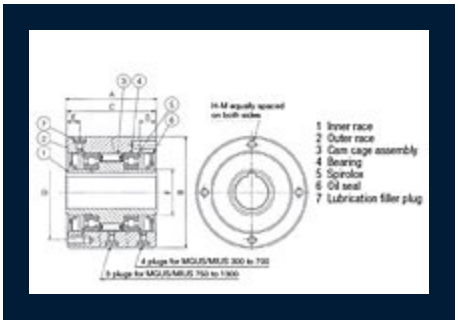

Specifications

Bore Size	0.500 in 12.70 mm
Torque Capacity	397.5 lb·ft 539.0 N·m
Max. Overrunning Inner Race	2600 rpm
Max. Overrunning Outer Race	800 rpm

Drag Torque	0.214 lb·ft 0.29 N·m
Bore Keyseat	1/8 x 1/16"
A (Overall Width)	2.750 in 69.85 mm
B (Overall Diameter)	3.500/3.498 in 88.90/88.85 mm
C (Inner Race Length)	2.690 in 68.33 mm
D (Pitch Circle Diameter)	2.875 in 73.03 mm
E (Cam Clutch Length)	0.421 in 10.70 mm
F (Reservoir Length)	1.248 in 31.70 mm
S	0.630 in 16.00 mm
H No. of Tapped Holes	4
M Thread	5/16-24
Oil Filler Plug	M6 x P1.0
Oil Capacity	1.02 oz 30 mL
Weight	2.700 kg 5.952 lb