U.S. Tsubaki Power Transmission, LLC
301 E. Marquardt Dr.
Wheeling, IL 60090

Phone: 847.459.9500 or 800.323.7790
Fax: 847.459.9515
Email: sales@ustsubaki.com

Website: www.ustsubaki.com

ITEM # MZ17-17, MZ17-17 MM BORE CAM CLUTCH

MZ Series Cam Clutch products are designed for general overrunning applications. The MZ Series can be used in applications which require the inner or outer race to have overrunning capability. The MZ Series comes pre-lubricated with grease and is ready to install. No lubrication maintenance is required. This series is ideal for gears, pulleys and clutch assemblies.



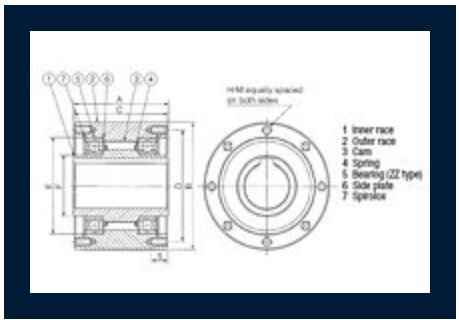

Specifications

Bore Size	17.00 mm
Bore Keyway	5 x 2.3 mm
Torque Capacity	158.6 lb·ft 215.0 N·m
Drag Torque	0.148 lb·ft 0.20 N·m
Max. Overrunning Shaft	2000 rpm
Max. Overrunning Outer Race	800 rpm

Max. Indexing	150 cpm
A (Overall Width)	2.598 in 66.00 mm
B (Overall Diameter)	2.953 in 75.00 mm
C (Overall Race Width)	2.520 in 64.00 mm
D (Pitch Circle Diameter)	2.520 in 64.00 mm
E (Outer Race I.D.)	2.047 in 52.00 mm
F (Inner Race O.D.)	1.102 in 28.00 mm
G (Counter Bore Depth)	0.248 in 6.30 mm
S (Thread Depth)	0.394 in 10.00 mm
H (Quantity)	6
M (Size x Pitch)	M5x0.8
Weight	3.960 lb 1.800 kg