U.S. Tsubaki Power Transmission, LLC
301 E. Marquardt Dr.
Wheeling, IL 60090

Phone: 847.459.9500 or 800.323.7790
Fax: 847.459.9515
Email: sales@ustsubaki.com

Website: www.ustsubaki.com

ITEM # MZEU25, MZEU-25 MM BORE CAM CLUTCH

MZEU Series is a general purpose Cam Clutch suitable for a wide variety of applications. A selection of add-on flanges and torque arms are available enabling this Cam Clutch to easily fit where custom designed products were previously required. MZEU12 to MZEU80 are pre-greased, requiring no lubrication. MZEU90 to MZEU150 require oil lubrication. Contact Tsubaki for indexing applications above 50 cycles per minute.



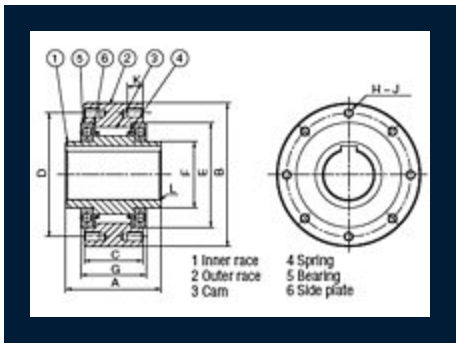

Specifications

Bore Size	0.984 in 25.00 mm
Torque Capacity	313.5 lb·ft 425.0 N·m
Max. Overrunning Shaft	1600 rpm
Max. Overrunning Outer Race	600 rpm
Drag Torque	0.243 lb·ft 0.33 N·m

Inner Race Keyway	8 x 3.3 mm
A (Overall Width)	2.362 in 60.00 mm
B (Overall Height)	3.543 in 90.00 mm
C (Outer Race Width)	1.378 in 35.00 mm
D (Bolt Circle Diameter)	3.071 in 78.00 mm
E (Outer Race I.D.)	2.677 in 68.00 mm
F (Inner Race O.D.)	1.575 in 40.00 mm
G (Cam Cage Width)	1.575 in 40.00 mm
J (Quantity)	4
H (Bolt Circle Tap)	M6
K (Thread Depth)	0.394 in 10.00 mm
L (Chamfer)	0.031 in 0.80 mm
Weight	3.960 lb 1.800 kg