**U.S. Tsubaki Power Transmission, LLC**
301 E. Marquardt Dr.
Wheeling, IL 60090

**Phone:** 847.459.9500 or 800.323.7790
**Fax:** 847.459.9515
**Email:** sales@ustsubaki.com

**Website:** www.ustsubaki.com

# ITEM # MIUS800-3R, MIUS800-3 15/16" BORE CAM CLUTCH

MIUS Series Cam Clutch units are designed for indexing applications. In this mode of operation, reciprocating motion applied to the driving race of the clutch is transformed into uni-directional intermittent motion, at the driven race. The clutch drives in the forward stroke (index) and overruns on the return stroke. In addition to torque capacity, consider the number of indexing cycles per minute. This series ships pre-lubricated with oil.



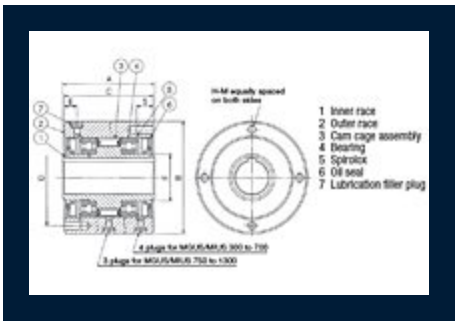


## Specifications

| | |
|---|---|
| **Bore Size** | 3.938 in<br>100.01 mm |
| **Bore Keyseat** | 1 x 1/2" |
| **Torque Capacity** | 12981.1 lb·ft<br>17600.0 N·m |
| **Max. Overrunning Inner Race** | 20 rpm |
| **Max. Indexing** | 300 cpm |

| | |
|---|---|
| **Drag Torque** | 6.144 lb·ft<br>8.33 N·m |
| **A (Overall Width)** | 6.000 in<br>152.40 mm |
| **B (Overall Diameter)** | 10.000/9.998 in<br>254.00/253.95 mm |
| **C (Outer Race Width)** | 5.880 in<br>149.35 mm |
| **D (Pitch Circle Diameter)** | 8.940 in<br>227.08 mm |
| **E (Filler Plug Location)** | 2.940 in<br>74.68 mm |
| **F (Inner Race O.D.)** | 5.512 in<br>140.00 mm |
| **S (Thread Depth)** | 0.984 in<br>25.00 mm |
| **H (No. of Tapped Holes)** | 8 |
| **M (Thread)** | 1/2-20 |
| **Oil Filler Plug** | M8 x P1.25 |
| **Oil Capacity** | 34.00 oz<br>1000 mL |
| **Weight** | 102.513 lb<br>46.500 kg |