U.S. Tsubaki Power Transmission, LLC
301 E. Marquardt Dr.
Wheeling, IL 60090

Phone: 847.459.9500 or 800.323.7790
Fax: 847.459.9515
Email: sales@ustsubaki.com

Website: www.ustsubaki.com

ITEM # BB40, BB-40 MM BORE CAM CLUTCH

BB Series Cam Clutches are a combination of a 62 Series ball bearing and a cam style clutch. These units are designed for press fit applications and are available in five variations, combinations of metal shield or dust protective sealed type and with or without keyways on the inner and/or outer race to allow design and application flexibility. BB Series units come grease lubricated but metal shielded style can be adapted for oil bath lubrication.



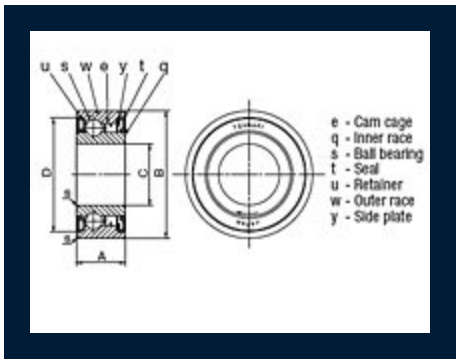

Specifications

Torque Capacity	191.8 lb·ft 260.0 N·m
Max. Overrunning Inner Race	1800 rpm
Max. Overrunning Outer Race	900 rpm
Drag Torque	0.030 lb·ft 0.04 N·m
Construction	Metal shield on one side, retainer on other side.
A (Overall Width)	0.866 in 22.00 mm

B (Overall Diameter)	3.150 in 80.00 mm
C (Bore Size)	1.575 in 40.00 mm
D (Outer Race I.D.)	2.795 in 71.00 mm
S (Chamfer)	0.043 in 1.10 mm
Dynamic Bearing Loads	3260 lbf 14500 N
Static Bearing Loads	2630 lbf 11700 N
Weight	0.900 lb 0.400 kg