U.S. Tsubaki Power Transmission, LLC
301 E. Marquardt Dr.
Wheeling, IL 60090

Phone: 847.459.9500 or 800.323.7790
Fax: 847.459.9515
Email: sales@ustsubaki.com

Website: www.ustsubaki.com

ITEM # BR58HT-R101B-80, BR-HT58-80.00 MM BORE CAM CLUTCH

BR-HT is mainly used in backstop applications as an integral part of a gear reducer. Prevention of reverse rotation for inclined conveyor and bucket elevator are typical application BR-HT assures not only the immediate backstop function under high torque, but also long service life by the “lift-off” design. In addition, installation on the high speed shaft with low torque enables selection of more compact models with resulting lower cost.



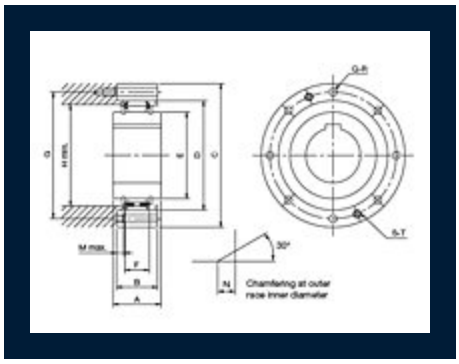

Specifications

Torque	1327.6 lb·ft 1800.0 N·m
Min. Inner Race Overrunning Speed	550 rpm
Max. Inner Race Overrunning Speed	3600 rpm
Max. Engagement	260 rpm
Bore Size	3.150 in 80.00 mm

A (Inner Race Width)	1.969 in 50.00 mm
B (Outer Race Width)	1.969 in 50.00 mm
C (Outer Race O.D.)	6.890 in 175.00 mm
D (Outer Race I.D.)	4.921 in 125.00 mm
E (Inner Race O.D.)	3.937 in 100.00 mm
G (Bolt Circle Diameter)	6.102 in 155.00 mm
Q-R (Mounting Holes Quantity - Size)	12-M10
S-T (Removed Holes Quantity - Size)	2-M10
F (Cam Width)	0.984 in 25.00 mm
Weight	14.740 lb 6.700 kg
H (Housing Bore Min.)	4.606 in 117.00 mm
M (Counter Bore Depth Max.)	0.453 in 11.50 mm
N (Chamfer)	0.039 in 1.00 mm