U.S. Tsubaki Power Transmission, LLC
301 E. Marquardt Dr.
Wheeling, IL 60090

Phone: 847.459.9500 or 800.323.7790
Fax: 847.459.9515
Email: sales@ustsubaki.com

Website: www.ustsubaki.com

ITEM # BR95HT-R170C-100, BR-HT95-100.00 MM BORE CAM CLUTCH

BR-HT is mainly used in backstop applications as an integral part of a gear reducer. Prevention of reverse rotation for inclined conveyor and bucket elevator are typical application BR-HT assures not only the immediate backstop function under high torque, but also long service life by the “lift-off” design. In addition, installation on the high speed shaft with low torque enables selection of more compact models with resulting lower cost.



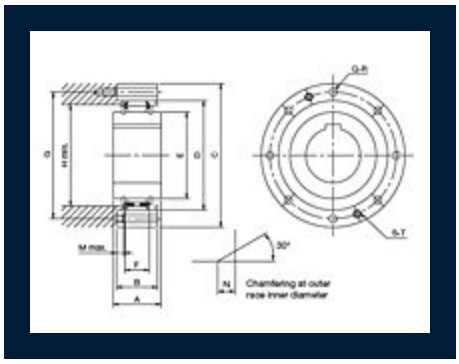

Specifications

Torque	15120.0 lb·ft 20500.0 N·m
Min. Inner Race Overrunning Speed	240 rpm
Max. Inner Race Overrunning Speed	2700 rpm
Max. Engagement	130 rpm
Bore Size	3.937 in 100.00 mm

A (Inner Race Width)	3.150 in 80.00 mm
B (Outer Race Width)	3.150 in 80.00 mm
C (Outer Race O.D.)	11.417 in 290.00 mm
D (Outer Race I.D.)	8.268 in 210.00 mm
E (Inner Race O.D.)	6.969 in 177.00 mm
G (Bolt Circle Diameter)	10.157 in 258.00 mm
Q-R (Mounting Holes Quantity - Size)	12-M16
S-T (Removed Holes Quantity - Size)	2-M16
F (Cam Width)	2.480 in 63.00 mm
Weight	77.000 lb 35.000 kg
H (Housing Bore Min.)	7.874 in 200.00 mm
M (Counter Bore Depth Max.)	0.295 in 7.50 mm
N (Chamfer)	0.079 in 2.00 mm