U.S. Tsubaki Power Transmission, LLC
301 E. Marquardt Dr.
Wheeling, IL 60090

Phone: 847.459.9500 or 800.323.7790
Fax: 847.459.9515
Email: sales@ustsubaki.com

Website: www.ustsubaki.com

ITEM # BREU150, BREU-150 MM BORE CAM CLUTCH

The BREU Series Cam Clutch is commonly used in backstopping applications that require higher speed inner race overrunning, and low to medium speed engagement speed capability. The BREU Series Cam Clutch is popular amongst both OEM's and end users, utilizing a broad array of mounting accessories and the ability to select keyway positions on the inner and outer race to offer mounting flexibility. BREU Series incorporates a "lift off" style cam which provides increased Cam Clutch life, please see

more



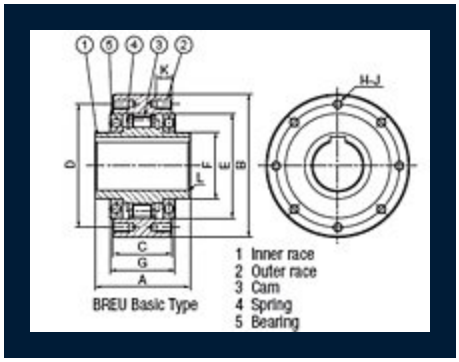

Specifications

Bore Size	5.906 in 150.00 mm
Torque Capacity	25009.2 lb·ft 33908.0 N·m
Min. Inner Race Overrunning	370 rpm
Max. Inner Race Overrunning	1300 rpm
Max. Engagement	180 rpm
Inner Race Keyway	36 x 8.4 mm

A (Overall Width)	9.685 in 246.00 mm
B (Overall Height)	15.748 in 400.00 mm
C (Outer Race Width)	7.087 in 180.00 mm
D (Bolt Circle Diameter)	14.173 in 360.00 mm
E (Outer Race I.D.)	12.205 in 310.00 mm
F (Inner Race O.D.)	7.874 in 200.00 mm
G (Cam Cage Width)	7.638 in 194.00 mm
H-J (Bolt Circle Tap and Qt.)	M20
K (Thread Depth)	1.260 in 32.00 mm
L (Chamfer)	0.098 in 2.50 mm
Weight	319.000 lb 145.000 kg