U.S. Tsubaki Power Transmission, LLC
301 E. Marquardt Dr.
Wheeling, IL 60090

Phone: 847.459.9500 or 800.323.7790
Fax: 847.459.9515
Email: sales@ustsubaki.com

Website: www.ustsubaki.com

ITEM # MZEU90, MZEU-90 MM BORE CAM CLUTCH

MZEU Series is a general purpose Cam Clutch suitable for a wide variety of applications. A selection of add-on flanges and torque arms are available enabling this Cam Clutch to easily fit where custom designed products were previously required. MZEU12 to MZEU80 are pre-greased, requiring no lubrication. MZEU90 to MZEU150 require oil lubrication. Contact Tsubaki for indexing applications above 50 cycles per minute.



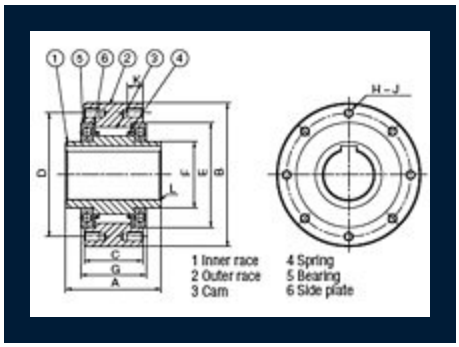

Specifications

Bore Size	3.543 in 90.00 mm
Torque Capacity	8850.7 lb·ft 12000.0 N·m
Max. Overrunning Shaft	450 rpm
Max. Overrunning Outer Race	150 rpm
Drag Torque	3.467 lb·ft 4.70 N·m

Inner Race Keyway	25 x 5.4 mm
A (Overall Width)	6.220 in 158.00 mm
B (Overall Height)	9.055 in 230.00 mm
C (Outer Race Width)	4.528 in 115.00 mm
D (Bolt Circle Diameter)	8.110 in 206.00 mm
E (Outer Race I.D.)	7.087 in 180.00 mm
F (Inner Race O.D.)	4.724 in 120.00 mm
G (Cam Cage Width)	4.921 in 125.00 mm
J (Quantity)	10
H (Bolt Circle Tap)	M12
K (Thread Depth)	0.787 in 20.00 mm
L (Chamfer)	0.079 in 2.00 mm
Weight	61.820 lb 28.100 kg