**U.S. Tsubaki Power Transmission, LLC**
301 E. Marquardt Dr.
Wheeling, IL 60090

**Phone:** 847.459.9500 or 800.323.7790
**Fax:** 847.459.9515
**Email:** sales@ustsubaki.com

**Website:** www.ustsubaki.com

# ITEM # BSEU40-20, BSEU40-20 MM BORE CAM CLUTCH

BSEU Series Cam Clutch was developed as a user-friendly backstopping Cam Clutch. It has cam and roller construction which is the same as the smaller size BS Series Cam Clutch. The outer race has a special shape which combines the torque arm providing easy installation. These Cam Clutches are shipped pre-lubricated with grease and ready for installation. Most often used as a backstop in applications where limited space is available.



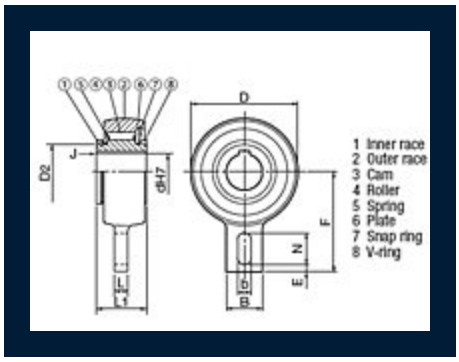


## Specifications

| | |
|---|---|
| **Torque Capacity** | 1062.0 lb·ft<br>1440.0 N·m |
| **Max. Overrunning Speed** | 450 rpm |
| **Bore Size** | 0.787 in<br>20.00 mm |
| **Inner Race Keyway** | 6 x 2.8 mm |
| **D (Diameter)** | 4.646 in<br>118.00 mm |
| **D2** | 2.362 in<br>60.00 mm |

| | |
|---|---|
| **L1 (Overall Width)** | 2.165 in<br>55.00 mm |
| **L (Width)** | 0.591 in<br>15.00 mm |
| **B (Tab Width)** | 1.575 in<br>40.00 mm |
| **F (End to Center-Line)** | 4.331 in<br>110.00 mm |
| **b (Slot Width)** | 0.591 in<br>15.00 mm |
| **N (Slot Height)** | 1.378 in<br>35.00 mm |
| **E** | 0.315 in<br>8.00 mm |
| **J (Chamfer)** | 0.059 in<br>1.50 mm |
| **Weight (Approx.)** | 8.360 lb<br>3.800 kg |