U.S. Tsubaki Power Transmission, LLC
301 E. Marquardt Dr.
Wheeling, IL 60090

Phone: 847.459.9500 or 800.323.7790
Fax: 847.459.9515
Email: sales@ustsubaki.com

Website: www.ustsubaki.com

ITEM # MZEU40, MZEU-40 MM BORE CAM CLUTCH

MZEU Series is a general purpose Cam Clutch suitable for a wide variety of applications. A selection of add-on flanges and torque arms are available enabling this Cam Clutch to easily fit where custom designed products were previously required. MZEU12 to MZEU80 are pre-greased, requiring no lubrication. MZEU90 to MZEU150 require oil lubrication. Contact Tsubaki for indexing applications above 50 cycles per minute.



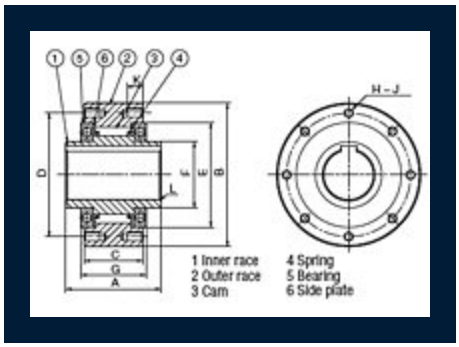

Specifications

Bore Size	1.575 in 40.00 mm
Torque Capacity	995.7 lb·ft 1350.0 N·m
Max. Overrunning Shaft	1400 rpm
Max. Overrunning Outer Race	300 rpm
Drag Torque	0.435 lb·ft 0.59 N·m

Inner Race Keyway	12 x 3.3 mm
A (Overall Width)	3.386 in 86.00 mm
B (Overall Height)	4.921 in 125.00 mm
C (Outer Race Width)	2.087 in 53.00 mm
D (Bolt Circle Diameter)	4.252 in 108.00 mm
E (Outer Race I.D.)	3.543 in 90.00 mm
F (Inner Race O.D.)	2.165 in 55.00 mm
G (Cam Cage Width)	2.323 in 59.00 mm
J (Quantity)	6
H (Bolt Circle Tap)	M8
K (Thread Depth)	0.551 in 14.00 mm
L (Chamfer)	0.051 in 1.30 mm
Weight	10.560 lb 4.800 kg