U.S. Tsubaki Power Transmission, LLC
301 E. Marquardt Dr.
Wheeling, IL 60090

Phone: 847.459.9500 or 800.323.7790
Fax: 847.459.9515
Email: sales@ustsubaki.com

Website: www.ustsubaki.com

ITEM # BS50-1H, BS50-1 1/2" BORE CAM CLUTCH

BS Series Cam Clutch products are designed to provide inner race overrunning capability in one direction of operation, and engage the outer race when reverse rotation is experienced. BS Series units are often found on incline conveyor systems, or pump systems that may experience reverse rotation due to excessive loading on the discharge side of the pump. BS Series Cam Clutches are a cam and roller design incorporating the low friction bearing into the cam cage.

A complete Cam Clutch assembly



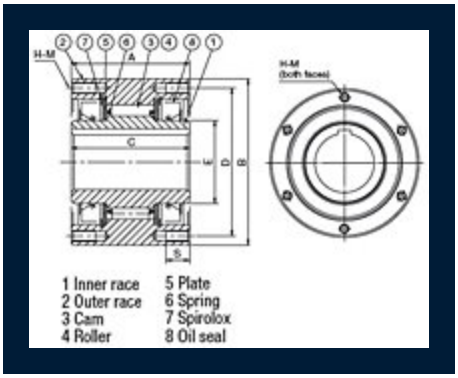

more

Specifications

Torque	578.0 lb·ft 784.0 N·m
Inner Race Max. Overrunning Speed	300 rpm
Drag Torque	0.723 lb·ft 0.98 N·m
A (Overall Length)	2.638 in 67.00 mm

B (Diameter)	4.921 in 125.00 mm
C (Inside Width)	2.638 in 67.00 mm
D (Bolt Circle Diameter)	4.331 in 110.00 mm
E (Inner Race O.D.)	2.756 in 70.00 mm
S (Thread Depth)	0.630 in 16.00 mm
H-M (Size x Pitch No. of Tapped Holes, Qt.)	M8 x P1.25 (4)
Weight (Approx.)	10.340 lb 4.700 kg