**U.S. Tsubaki Power Transmission, LLC**
301 E. Marquardt Dr.
Wheeling, IL 60090

**Phone:** 847.459.9500 or 800.323.7790
**Fax:** 847.459.9515
**Email:** sales@ustsubaki.com

**Website:** www.ustsubaki.com

# ITEM # BS50-1F, BS50-1 3/8" BORE CAM CLUTCH

BS Series Cam Clutch products are designed to provide inner race overrunning capability in one direction of operation, and engage the outer race when reverse rotation is experienced. BS Series units are often found on incline conveyor systems, or pump systems that may experience reverse rotation due to excessive loading on the discharge side of the pump. BS Series Cam Clutches are a cam and roller design incorporating the low friction bearing into the cam cage.

A complete Cam Clutch assembly




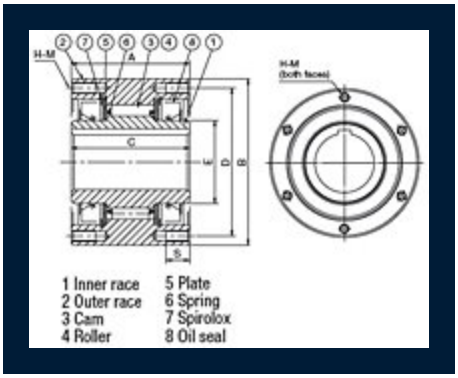


more

## Specifications

| | |
|---|---|
| **Torque** | 578.0 lb·ft<br>784.0 N·m |
| **Inner Race Max. Overrunning Speed** | 300 rpm |
| **Drag Torque** | 0.723 lb·ft<br>0.98 N·m |
| **A (Overall Length)** | 2.638 in<br>67.00 mm |

| | |
|---|---|
| **B (Diameter)** | 4.921 in<br>125.00 mm |
| **C (Inside Width)** | 2.638 in<br>67.00 mm |
| **D (Bolt Circle Diameter)** | 4.331 in<br>110.00 mm |
| **E (Inner Race O.D.)** | 2.756 in<br>70.00 mm |
| **S (Thread Depth)** | 0.630 in<br>16.00 mm |
| **H-M (Size x Pitch No. of Tapped Holes, Qt.)** | M8 x P1.25 (4) |
| **Weight (Approx.)** | 10.340 lb<br>4.700 kg |