U.S. Tsubaki Power Transmission, LLC
301 E. Marquardt Dr.
Wheeling, IL 60090

Phone: 847.459.9500 or 800.323.7790
Fax: 847.459.9515
Email: sales@ustsubaki.com

Website: www.ustsubaki.com

ITEM # BB15K, BB-15 MM BORE CAM CLUTCH

BB Series Cam Clutches are a combination of a 62 Series ball bearing and a cam style clutch. These units are designed for press fit applications and are available in five variations, combinations of metal shield or dust protective sealed type and with or without keyways on the inner and/or outer race to allow design and application flexibility. BB Series units come grease lubricated but metal shielded style can be adapted for oil bath lubrication.



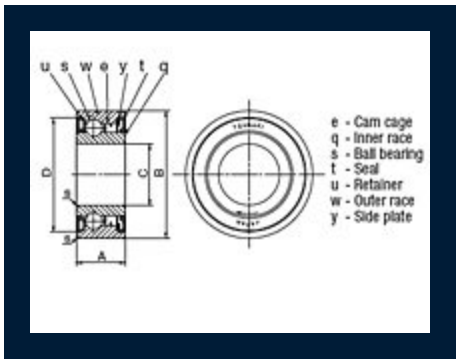

Specifications

Torque Capacity	21.4 lb·ft 29.0 N·m
Max. Overrunning Inner Race	3600 rpm
Max. Overrunning Outer Race	2000 rpm
Drag Torque	0.007 lb·ft 0.01 N·m
Construction	Metal shield on one side, retainer on other side. Keyway on inside diameter of Cam Clutch. Includes key.
A (Overall Width)	0.433 in 11.00 mm

B (Overall Diameter)	1.378 in 5.00 mm
C (Bore Size)	0.591 in 15.00 mm
D (Outer Race I.D.)	1.283 in 32.60 mm
S (Chamfer)	0.024 in 0.60 mm
Dynamic Bearing Loads	1338 lbf 5950 N
Static Bearing Loads	726 lbf 3230 N
Key Inner Race	5 x 3 x 11
Weight	0.100 lb 0.050 kg