U.S. Tsubaki Power Transmission, LLC
301 E. Marquardt Dr.
Wheeling, IL 60090

Phone: 847.459.9500 or 800.323.7790
Fax: 847.459.9515
Email: sales@ustsubaki.com

Website: www.ustsubaki.com

ITEM # MZEU80, MZEU-80 MM BORE CAM CLUTCH

MZEU Series is a general purpose Cam Clutch suitable for a wide variety of applications. A selection of add-on flanges and torque arms are available enabling this Cam Clutch to easily fit where custom designed products were previously required. MZEU12 to MZEU80 are pre-greased, requiring no lubrication. MZEU90 to MZEU150 require oil lubrication. Contact Tsubaki for indexing applications above 50 cycles per minute.



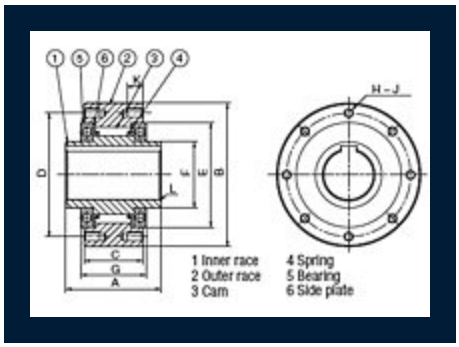

Specifications

Bore Size	3.150 in 80.00 mm
Torque Capacity	3813.2 lb·ft 5170.0 N·m
Max. Overrunning Shaft	800 rpm
Max. Overrunning Outer Race	200 rpm
Drag Torque	1.018 lb·ft 1.38 N·m

Inner Race Keyway	22 x 5.4 mm
A (Overall Width)	5.669 in 144.00 mm
B (Overall Height)	8.268 in 210.00 mm
C (Outer Race Width)	3.937 in 100.00 mm
D (Bolt Circle Diameter)	7.283 in 185.00 mm
E (Outer Race I.D.)	6.299 in 160.00 mm
F (Inner Race O.D.)	4.134 in 105.00 mm
G (Cam Cage Width)	4.252 in 108.00 mm
J (Quantity)	10
H (Bolt Circle Tap)	M10
K (Thread Depth)	0.630 in 16.00 mm
L (Chamfer)	0.071 in 1.80 mm
Weight	50.820 lb 23.100 kg