U.S. Tsubaki Power Transmission, LLC
301 E. Marquardt Dr.
Wheeling, IL 60090

Phone: 847.459.9500 or 800.323.7790
Fax: 847.459.9515
Email: sales@ustsubaki.com

Website: www.ustsubaki.com

ITEM # BS30-30, BS30-1 2/11" BORE CAM CLUTCH

BS Series Cam Clutch products are designed to provide inner race overrunning capability in one direction of operation, and engage the outer race when reverse rotation is experienced. BS Series units are often found on incline conveyor systems, or pump systems that may experience reverse rotation due to excessive loading on the discharge side of the pump. BS Series Cam Clutches are a cam and roller design incorporating the low friction bearing into the cam cage.

A complete Cam Clutch assembly



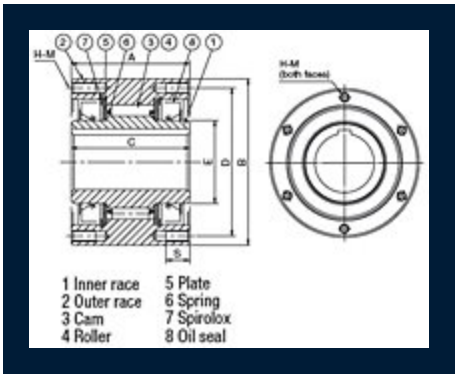

more

Specifications

Torque	217.0 lb·ft 294.0 N·m
Inner Race Max. Overrunning Speed	350 rpm
Drag Torque	0.428 lb·ft 0.58 N·m
A (Overall Length)	2.520 in 64.00 mm

B (Diameter)	3.543 in 90.00 mm
C (Inside Width)	2.520 in 64.00 mm
D (Bolt Circle Diameter)	3.150 in 80.00 mm
E (Inner Race O.D.)	1.772 in 45.00 mm
S (Thread Depth)	0.512 in 13.00 mm
H-M (Size x Pitch No. of Tapped Holes, Qt.)	M6 x P1.0 (4)
Weight (Approx.)	5.060 lb 2.300 kg