U.S. Tsubaki Power Transmission, LLC
301 E. Marquardt Dr.
Wheeling, IL 60090

Phone: 847.459.9500 or 800.323.7790
Fax: 847.459.9515

Email: sales@ustsubaki.com
Website: www.ustsubaki.com

ITEM # TSS25, TSS-25 MM BORE CAM CLUTCH

TSS Series Cam Clutch is designed for press fit installation with outside dimensions the same as the 62 Series ball bearing. As a sprag clutch, higher torque capacities are often higher than a similar ramp & roller design. This design provides easy handling and installation, most often with a Series 62 ball bearing located next to the TSS Cam Clutch. The TSS Series is ideal for applications that require high speed inner race overrunning in a very compact package. This series ships pre-

more

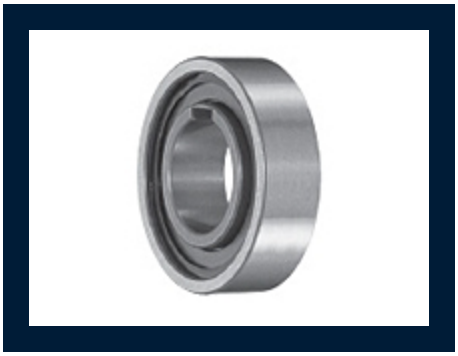

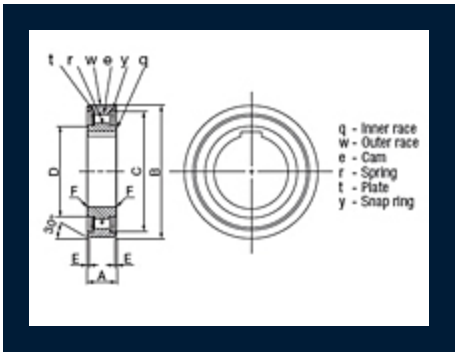

Specifications

Bore Size	0.984 in 25.00 mm
Torque Capacity	41.3 lb·ft 56.0 N·m
Max. Overrunning Inner Race	2200 rpm
Max. Overrunning Outer Race	1100 rpm

Drag Torque	0.015 lb·ft 0.02 N·m
Keyway	8 x 2.0 mm
A (Overall Width)	0.591 in 15.00 mm
B (Overall Diameter)	2.047 in 52.00 mm
C (Outer Race I.D.)	1.772 in 45.00 mm
D (Inner Race I.D.)	1.260 in 32.00 mm
E (Offset)	0.031 in 0.80 mm
F (Chamfer)	0.031 in 0.80 mm
Weight	0.308 lb 0.140 kg