U.S. Tsubaki Power Transmission, LLC
301 E. Marquardt Dr.
Wheeling, IL 60090

Phone: 847.459.9500 or 800.323.7790
Fax: 847.459.9515
Email: sales@ustsubaki.com

Website: www.ustsubaki.com

ITEM # MGUS600-1J, MGUS600-1 5/8" BORE CAM CLUTCH

MGUS Series Cam Clutch products are designed to satisfy inner or outer race overrunning/general application requirements. Depending on application requirements, the MGUS Series can be used in overrunning, indexing, or backstopping applications. This series is offered in both metric and inch based inner race configurations. MGUS Series units can easily be mated to pulleys, gears, or sprockets. MGUS Series ships pre-lubricated with oil.

Note: When placing an order for MGUS Series Cam Clutch model

more



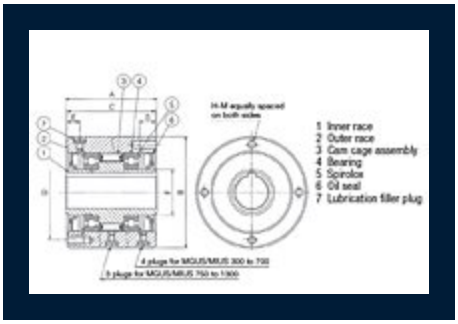

Specifications

Bore Size	1.625 in 41.28 mm
Torque Capacity	2315.9 lb·ft 3140.0 N·m
Max. Overrunning Inner Race	2100 rpm
Max. Overrunning Outer Race	700 rpm

Drag Torque	0.627 lb·ft 0.85 N·m
Bore Keyseat	3/8 x 3/16"
A (Overall Width)	3.750 in 95.25 mm
B (Overall Diameter)	5.375/5.373 in 136.53/136.48 mm
C (Inner Race Length)	3.630 in 92.20 mm
D (Pitch Circle Diameter)	4.750 in 120.65 mm
E (Cam Clutch Length)	0.503 in 12.80 mm
F (Reservoir Length)	2.748 in 69.80 mm
S	0.630 in 16.00 mm
H No. of Tapped Holes	6
M Thread	5/16-24
Oil Filler Plug	M6 x P1.0
Oil Capacity	2.72 oz 80 mL
Weight	8.600 kg 18.959 lb