U.S. Tsubaki Power Transmission, LLC
301 E. Marquardt Dr.
Wheeling, IL 60090

Phone: 847.459.9500 or 800.323.7790
Fax: 847.459.9515
Email: sales@ustsubaki.com

Website: www.ustsubaki.com

ITEM # BR80HT-B120B-70, BR-HT80-70.00 MM BORE CAM CLUTCH

BR-HT is mainly used in backstop applications as an integral part of a gear reducer. Prevention of reverse rotation for inclined conveyor and bucket elevator are typical application BR-HT assures not only the immediate backstop function under high torque, but also long service life by the “lift-off” design. In addition, installation on the high speed shaft with low torque enables selection of more compact models with resulting lower cost.



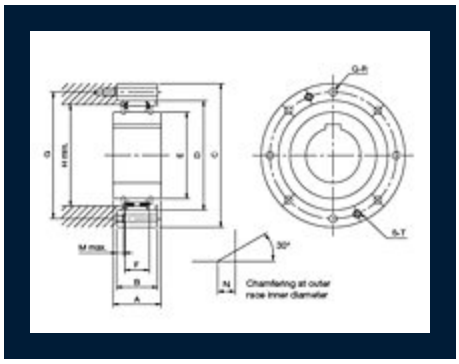

Specifications

Torque	5162.9 lb·ft 7000.0 N·m
Min. Inner Race Overrunning Speed	310 rpm
Max. Inner Race Overrunning Speed	3600 rpm
Max. Engagement	160 rpm
Bore Size	2.756 in 70.00 mm

A (Inner Race Width)	2.756 in 70.00 mm
B (Outer Race Width)	2.362 in 60.00 mm
C (Outer Race O.D.)	8.268 in 210.00 mm
D (Outer Race I.D.)	6.299 in 160.00 mm
E (Inner Race O.D.)	5.000 in 127.00 mm
G (Bolt Circle Diameter)	7.283 in 185.00 mm
Q-R (Mounting Holes Quantity - Size)	12-M10
S-T (Removed Holes Quantity - Size)	2-M10
F (Cam Width)	1.969 in 50.00 mm
Weight	28.600 lb 13.000 kg
H (Housing Bore Min.)	5.827 in 148.00 mm
M (Counter Bore Depth Max.)	0.157 in 4.00 mm
N (Chamfer)	0.059 in 1.50 mm