U.S. Tsubaki Power Transmission, LLC
301 E. Marquardt Dr.
Wheeling, IL 60090

Phone: 847.459.9500 or 800.323.7790
Fax: 847.459.9515

Email: sales@ustsubaki.com
Website: www.ustsubaki.com

ITEM # TSS15, TSS-15 MM BORE CAM CLUTCH

TSS Series Cam Clutch is designed for press fit installation with outside dimensions the same as the 62 Series ball bearing. As a sprag clutch, higher torque capacities are often higher than a similar ramp & roller design. This design provides easy handling and installation, most often with a Series 62 ball bearing located next to the TSS Cam Clutch. The TSS Series is ideal for applications that require high speed inner race overrunning in a very compact package. This series ships pre-

more

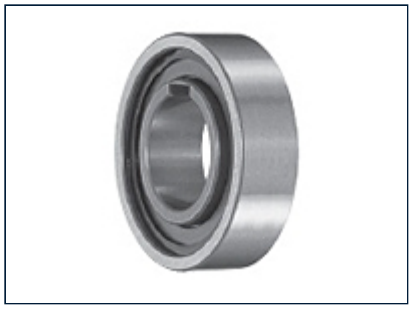

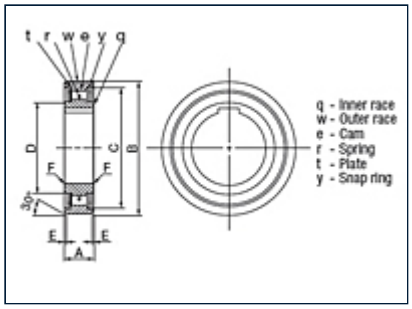

Specifications	
Bore Size	0.591 in 15.00 mm
Torque Capacity	16.2 lb·ft 22.0 N·m
Max. Overrunning Inner Race	3500 rpm

Max. Overrunning Outer Race	1800 rpm
Drag Torque	0.007 lb·ft 0.01 N·m
Keyway	5 x 1.2 mm
A (Overall Width)	0.433 in 11.00 mm
B (Overall Diameter)	1.378 in 35.00 mm
C (Outer Race I.D.)	1.260 in 32.00 mm
D (Inner Race I.D.)	0.811 in 20.60 mm
E (Offset)	0.024 in 0.60 mm
F (Chamfer)	0.024 in 0.60 mm
Weight	0.086 lb 0.039 kg