U.S. Tsubaki Power Transmission, LLC
301 E. Marquardt Dr.
Wheeling, IL 60090

Phone: 847.459.9500 or 800.323.7790
Fax: 847.459.9515
Email: sales@ustsubaki.com

Website: www.ustsubaki.com

ITEM # MGUS900-5, MGUS900-5" BORE CAM CLUTCH

MGUS Series Cam Clutch products are designed to satisfy inner or outer race overrunning/general application requirements. Depending on application requirements, the MGUS Series can be used in overrunning, indexing, or backstopping applications. This series is offered in both metric and inch based inner race configurations. MGUS Series units can easily be mated to pulleys, gears, or sprockets. MGUS Series ships pre-lubricated with oil.

Note: When placing an order for MGUS Series Cam Clutch model

more



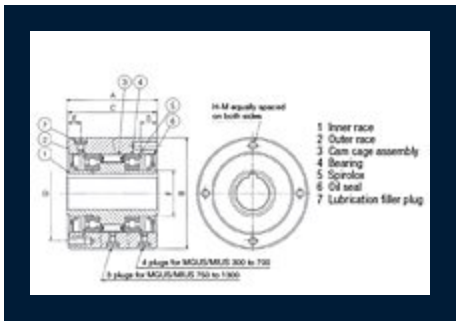

Specifications

Bore Size	5.000 in 127.00 mm
Torque Capacity	18070.2 lb·ft 24500.0 N·m
Max. Overrunning Inner Race	1200 rpm
Max. Overrunning Outer Race	400 rpm

Drag Torque	4.993 lb·ft 6.77 N·m
Bore Keyseat	1 x 3/8"
A (Overall Width)	6.380 in 162.05 mm
B (Overall Diameter)	12.000/11.997 in 304.80/304.72 mm
C (Inner Race Length)	6.250 in 158.75 mm
D (Pitch Circle Diameter)	9.750 in 247.65 mm
E (Cam Clutch Length)	3.125 in 79.38 mm
F (Reservoir Length)	6.693 in 170.00 mm
S	1.260 in 32.00 mm
H No. of Tapped Holes	10
M Thread	5/8-18
Oil Filler Plug	M8 x P1.25
Oil Capacity	21.08 oz 620 mL
Weight	70.500 kg 155.423 lb