U.S. Tsubaki Power Transmission, LLC
301 E. Marquardt Dr.
Wheeling, IL 60090

Phone: 847.459.9500 or 800.323.7790
Fax: 847.459.9515

Email: sales@ustsubaki.com
Website: www.ustsubaki.com

ITEM # BUS206, BUS200-206 MM BORE CAM CLUTCH

BUS200 Series Cam Clutch is a general purpose Cam Clutch used in backstop, overrunning, and indexing applications. Generally the customer supplies the inner race as a component of his machinery but if desired, Tsubaki can also provide an inner race. A second very convenient feature is that the BUS200 Series outside diameter matches with 6200 Series ball bearings. Because of the common popular dimensions, BUS200 Series Cam Clutches are found as integral components in many pieces of machinery;

more

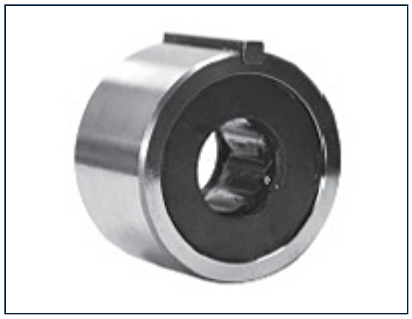

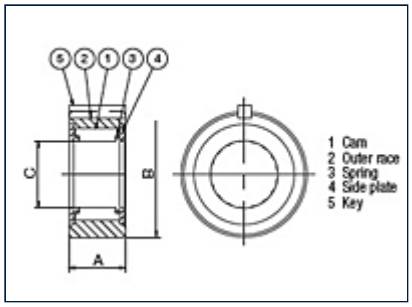

Specifications

Torque Capacity	177.0 lb·ft 240.0 N·m
Max. Overrunning Shaft	1800 rpm
Max. Overrunning Outer Race	350 rpm

Drag Torque	0.148 lb·ft 0.20 N·m
Max. Indexing	150 cpm
A (Overall Width)	1.125 in 28.58 mm
B (Overall Diameter)	2.440/2.439 in 61.98/61.95 mm
C (Shaft Diameter)	1.290/1.289 in 32.77/32.74 mm
Keyway	1/4 x 1/4 x 1-1/4 in
Use with Bearing Number	6206
Weight	1.499 lb 0.680 kg