U.S. Tsubaki Power Transmission, LLC
301 E. Marquardt Dr.
Wheeling, IL 60090

Phone: 847.459.9500 or 800.323.7790
Fax: 847.459.9515
Email: sales@ustsubaki.com

Website: www.ustsubaki.com

ITEM # MIUS300-H, MIUS300-1/2" BORE CAM CLUTCH

MIUS Series Cam Clutch units are designed for indexing applications. In this mode of operation, reciprocating motion applied to the driving race of the clutch is transformed into uni-directional intermittent motion, at the driven race. The clutch drives in the forward stroke (index) and overruns on the return stroke. In addition to torque capacity, consider the number of indexing cycles per minute. This series ships pre-lubricated with oil.



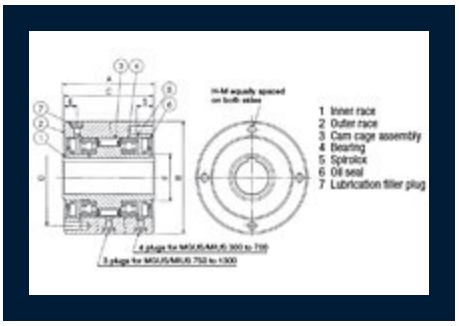

Specifications

Bore Size	0.500 in 12.70 mm
Bore Keyseat	1/8 x 1/16"
Torque Capacity	231.6 lb·ft 314.0 N·m
Max. Overrunning Inner Race	50 rpm
Max. Indexing	300 cpm

Drag Torque	0.229 lb·ft 0.31 N·m
A (Overall Width)	2.500 in 63.50 mm
B (Overall Diameter)	3.000/2.998 in 76.20/76.15 mm
C (Outer Race Width)	2.380 in 60.45 mm
D (Pitch Circle Diameter)	2.625 in 66.67 mm
E (Filler Plug Location)	0.409 in 10.40 mm
F (Inner Race O.D.)	1.122 in 28.50 mm
S (Thread Depth)	0.512 in 13.00 mm
H (No. of Tapped Holes)	4
M (Thread)	1/4-28
Oil Filler Plug	M6 x P1.0
Oil Capacity	1.70 oz 50 mL
Weight	3.968 lb 1.800 kg