U.S. Tsubaki Power Transmission, LLC
301 E. Marquardt Dr.
Wheeling, IL 60090

Phone: 847.459.9500 or 800.323.7790
Fax: 847.459.9515

Email: sales@ustsubaki.com
Website: www.ustsubaki.com

ITEM # BUS205, BUS200-205 MM BORE CAM CLUTCH

BUS200 Series Cam Clutch is a general purpose Cam Clutch used in backstop, overrunning, and indexing applications. Generally the customer supplies the inner race as a component of his machinery but if desired, Tsubaki can also provide an inner race. A second very convenient feature is that the BUS200 Series outside diameter matches with 6200 Series ball bearings. Because of the common popular dimensions, BUS200 Series Cam Clutches are found as integral components in many pieces of machinery;

more

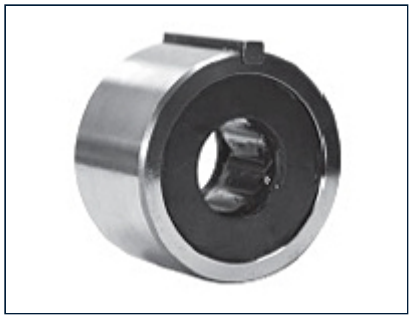

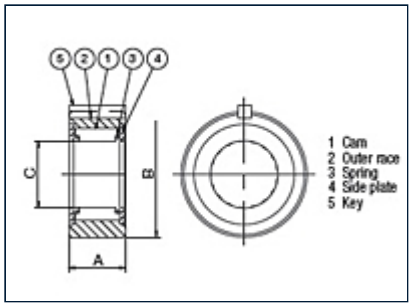

Specifications

Torque Capacity	81.0 lb·ft 110.0 N·m
Max. Overrunning Shaft	1800 rpm
Max. Overrunning Outer Race	400 rpm

Drag Torque	0.148 lb·ft 0.20 N·m
Max. Indexing	150 cpm
A (Overall Width)	1.000 in 25.40 mm
B (Overall Diameter)	2.046/2.045 in 51.98/51.94 mm
C (Shaft Diameter)	0.930/0.929 in 23.62/23.60 mm
Keyway	1/8 x 1/8 x 1 in
Use with Bearing Number	6205
Weight	0.992 lb 0.450 kg