U.S. Tsubaki Power Transmission, LLC
301 E. Marquardt Dr.
Wheeling, IL 60090

Phone: 847.459.9500 or 800.323.7790
Fax: 847.459.9515
Email: sales@ustsubaki.com

Website: www.ustsubaki.com

ITEM # MIUS800-3, MIUS800-3" BORE CAM CLUTCH

MIUS Series Cam Clutch units are designed for indexing applications. In this mode of operation, reciprocating motion applied to the driving race of the clutch is transformed into uni-directional intermittent motion, at the driven race. The clutch drives in the forward stroke (index) and overruns on the return stroke. In addition to torque capacity, consider the number of indexing cycles per minute. This series ships pre-lubricated with oil.



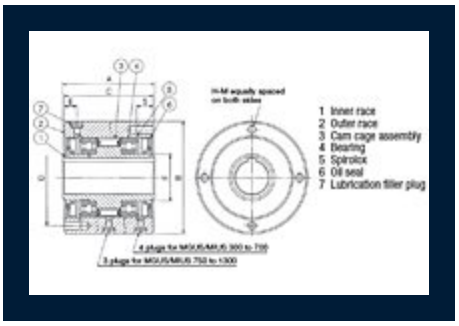

Specifications

Bore Size	3.000 in 76.20 mm
Bore Keyseat	3/4 x 3/8"
Torque Capacity	12981.1 lb·ft 17600.0 N·m
Max. Overrunning Inner Race	20 rpm
Max. Indexing	300 cpm

Drag Torque	6.144 lb·ft 8.33 N·m
A (Overall Width)	6.000 in 152.40 mm
B (Overall Diameter)	10.000/9.998 in 254.00/253.95 mm
C (Outer Race Width)	5.880 in 149.35 mm
D (Pitch Circle Diameter)	8.940 in 227.08 mm
E (Filler Plug Location)	2.940 in 74.68 mm
F (Inner Race O.D.)	5.512 in 140.00 mm
S (Thread Depth)	0.984 in 25.00 mm
H (No. of Tapped Holes)	8
M (Thread)	1/2-20
Oil Filler Plug	M8 x P1.25
Oil Capacity	34.00 oz 1000 mL
Weight	102.513 lb 46.500 kg