U.S. Tsubaki Power Transmission, LLC
301 E. Marquardt Dr.
Wheeling, IL 60090

Phone: 847.459.9500 or 800.323.7790
Fax: 847.459.9515
Email: sales@ustsubaki.com

Website: www.ustsubaki.com

ITEM # BR98HT-R200C-130, BR-HT98-130.00 MM BORE CAM CLUTCH

BR-HT is mainly used in backstop applications as an integral part of a gear reducer. Prevention of reverse rotation for inclined conveyor and bucket elevator are typical application BR-HT assures not only the immediate backstop function under high torque, but also long service life by the “lift-off” design. In addition, installation on the high speed shaft with low torque enables selection of more compact models with resulting lower cost.



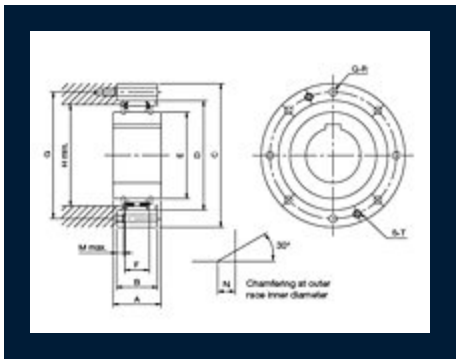

Specifications

Torque	19914.1 lb·ft 27000.0 N·m
Min. Inner Race Overrunning Speed	230 rpm
Max. Inner Race Overrunning Speed	2100 rpm
Max. Engagement	110 rpm
Bore Size	5.118 in 130.00 mm

A (Inner Race Width)	3.150 in 80.00 mm
B (Outer Race Width)	3.150 in 80.00 mm
C (Outer Race O.D.)	12.205 in 310.00 mm
D (Outer Race I.D.)	9.449 in 240.00 mm
E (Inner Race O.D.)	8.150 in 207.00 mm
G (Bolt Circle Diameter)	10.945 in 278.00 mm
Q-R (Mounting Holes Quantity - Size)	12-M16
S-T (Removed Holes Quantity - Size)	2-M16
F (Cam Width)	2.480 in 63.00 mm
Weight	72.600 lb 33.000 kg
H (Housing Bore Min.)	9.055 in 230.00 mm
M (Counter Bore Depth Max.)	0.295 in 7.50 mm
N (Chamfer)	0.079 in 2.00 mm