U.S. Tsubaki Power Transmission, LLC
301 E. Marquardt Dr.
Wheeling, IL 60090

Phone: 847.459.9500 or 800.323.7790
Fax: 847.459.9515
Email: sales@ustsubaki.com

Website: www.ustsubaki.com

ITEM # MGUS300-L, MGUS300-3/4" BORE CAM CLUTCH

MGUS Series Cam Clutch products are designed to satisfy inner or outer race overrunning/general application requirements. Depending on application requirements, the MGUS Series can be used in overrunning, indexing, or backstopping applications. This series is offered in both metric and inch based inner race configurations. MGUS Series units can easily be mated to pulleys, gears, or sprockets. MGUS Series ships pre-lubricated with oil.

Note: When placing an order for MGUS Series Cam Clutch model

more



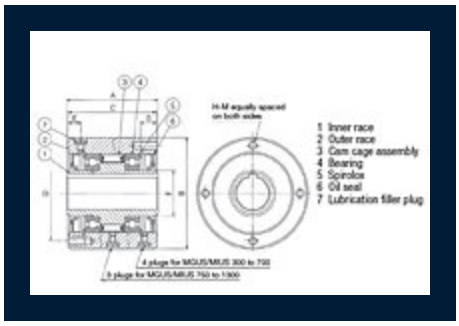

Specifications

Bore Size	0.750 in 19.05 mm
Torque Capacity	231.6 lb·ft 314.0 N·m
Max. Overrunning Inner Race	2800 rpm
Max. Overrunning Outer Race	900 rpm

Drag Torque	0.170 lb·ft 0.23 N·m
Bore Keyseat	3/16 x 3/32"
A (Overall Width)	2.500 in 63.50 mm
B (Overall Diameter)	3.000/2.998 in 76.20/76.15 mm
C (Inner Race Length)	2.380 in 60.45 mm
D (Pitch Circle Diameter)	2.625 in 66.67 mm
E (Cam Clutch Length)	0.409 in 10.40 mm
F (Reservoir Length)	1.122 in 28.50 mm
S	0.512 in 13.00 mm
H No. of Tapped Holes	4
M Thread	1/4-28
Oil Filler Plug	M6 x P1.0
Oil Capacity	0.85 oz 25 mL
Weight	1.800 kg 3.968 lb