U.S. Tsubaki Power Transmission, LLC
301 E. Marquardt Dr.
Wheeling, IL 60090

Phone: 847.459.9500 or 800.323.7790
Fax: 847.459.9515

Email: sales@ustsubaki.com
Website: www.ustsubaki.com

ITEM # BS65-2, BS65-2" BORE CAM CLUTCH

BS Series Cam Clutch products are designed to provide inner race overrunning capability in one direction of operation, and engage the outer race when reverse rotation is experienced. BS Series units are often found on incline conveyor systems, or pump systems that may experience reverse rotation due to excessive loading on the discharge side of the pump. BS Series Cam Clutches are a cam and roller design incorporating the low friction bearing into the cam cage.

A complete Cam Clutch assembly

more



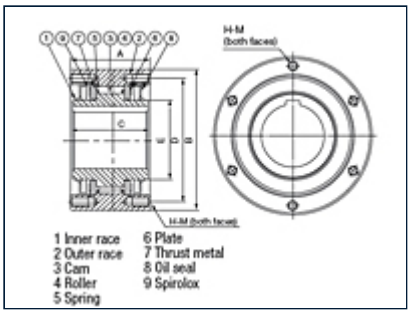

Specifications

Torque	1158.0 lb·ft 1570.0 N·m

Inner Race Max. Overrunning Speed	340 rpm
Drag Torque	2.891 lb·ft 3.92 N·m
A (Overall Length)	3.543 in 90.00 mm
B (Diameter)	6.299 in 160.00 mm
C (Inside Width)	3.346 in 85.00 mm
D (Bolt Circle Diameter)	5.512 in 140.00 mm
E (Inner Race O.D.)	3.543 in 90.00 mm
S (Thread Depth)	0.787 in 20.00 mm
H-M (Size x Pitch No. of Tapped Holes, Qt.)	M10 x P1.5 (6)
Weight (Approx.)	28.600 lb 13.000 kg