U.S. Tsubaki Power Transmission, LLC
301 E. Marquardt Dr.
Wheeling, IL 60090

Phone: 847.459.9500 or 800.323.7790
Fax: 847.459.9515
Email: sales@ustsubaki.com

Website: www.ustsubaki.com

ITEM # MZEU130, MZEU-130 MM BORE CAM CLUTCH

MZEU Series is a general purpose Cam Clutch suitable for a wide variety of applications. A selection of add-on flanges and torque arms are available enabling this Cam Clutch to easily fit where custom designed products were previously required. MZEU12 to MZEU80 are pre-greased, requiring no lubrication. MZEU90 to MZEU150 require oil lubrication. Contact Tsubaki for indexing applications above 50 cycles per minute.



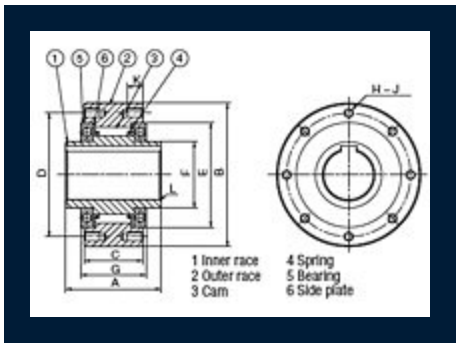

Specifications

Bore Size	5.118 in 130.00 mm
Torque Capacity	18070.2 lb·ft 24500.0 N·m
Max. Overrunning Shaft	320 rpm
Max. Overrunning Outer Race	110 rpm
Drag Torque	4.986 lb·ft 6.76 N·m

Inner Race Keyway	32 x 7.4 mm
A (Overall Width)	8.346 in 212.00 mm
B (Overall Height)	12.205 in 310.00 mm
C (Outer Race Width)	5.984 in 152.00 mm
D (Bolt Circle Diameter)	10.945 in 278.00 mm
E (Outer Race I.D.)	9.449 in 240.00 mm
F (Inner Race O.D.)	6.299 in 160.00 mm
G (Cam Cage Width)	6.614 in 168.00 mm
J (Quantity)	12
H (Bolt Circle Tap)	M16
K (Thread Depth)	0.945 in 24.00 mm
L (Chamfer)	0.098 in 2.50 mm
Weight	154.440 lb 70.200 kg