U.S. Tsubaki Power Transmission, LLC
301 E. Marquardt Dr.
Wheeling, IL 60090

Phone: 847.459.9500 or 800.323.7790
Fax: 847.459.9515
Email: sales@ustsubaki.com

Website: www.ustsubaki.com

ITEM # BSEU25-20, BSEU25-20 MM BORE CAM CLUTCH

BSEU Series Cam Clutch was developed as a user-friendly backstopping Cam Clutch. It has cam and roller construction which is the same as the smaller size BS Series Cam Clutch. The outer race has a special shape which combines the torque arm providing easy installation. These Cam Clutches are shipped pre-lubricated with grease and ready for installation. Most often used as a backstop in applications where limited space is available.



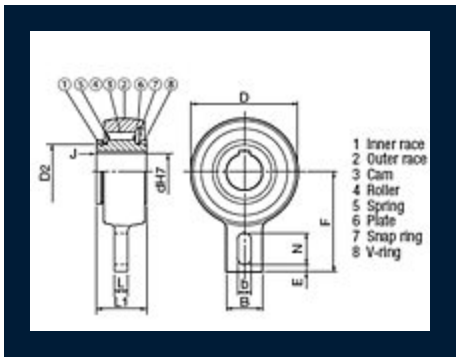

Specifications

Torque Capacity	159.0 lb·ft 216.0 N·m
Max. Overrunning Speed	500 rpm
Bore Size	0.787 in 20.00 mm
Inner Race Keyway	6 x 2.8 mm
D (Diameter)	3.268 in 83.00 mm
D2	1.654 in 42.00 mm

L1 (Overall Width)	1.378 in 35.00 mm
L (Width)	0.472 in 12.00 mm
B (Tab Width)	1.575 in 40.00 mm
F (End to Center-Line)	3.543 in 90.00 mm
b (Slot Width)	0.591 in 15.00 mm
N (Slot Height)	1.378 in 35.00 mm
E	0.197 in 5.00 mm
J (Chamfer)	0.039 in 1.00 mm
Weight (Approx.)	2.200 lb 1.000 kg